VOID

Hear. Feel. Connect.

voidacoustics.com



Venu V2 Series

More attractive and unexpecting than ever

USER GUIDE V2.0

©2022 Void Acoustics Research Ltd.

This user guide is subject to change without notice.
For the latest online version, visit: www.voidacoustics.com

Void Acoustics and the Void logo are registered trademarks of Void Acoustics Research Ltd. in the United Kingdom, USA and other countries; all other Void trademarks are the property of Void Acoustics Research Ltd.

1.1 Important safety instructions

The lightning flash with an arrowhead symbol within an equilateral triangle is intended to alert the user to the presence of uninsulated "dangerous voltage" within the product's enclosure that may be of sufficient magnitude to constitute a risk of electric shock to persons.

The exclamation point within an equilateral triangle is intended to alert the user of the presence of important operating and maintenance (servicing) instructions in the literature accompanying the appliance.

Safety instructions - read this first

1. Read these instructions.
2. Keep these instructions.
3. Heed all warnings.
4. Follow all instructions.
5. Do not use this apparatus near water.
6. Clean only with a dry cloth.
7. Do not block any ventilation openings. Install in accordance with the manufacturer's instructions.
8. Do not install near any heat source such as radiators, heat registers, stoves, or other such apparatus that produce heat.
9. Do not defeat the safety purpose of the grounding-type plug. A grounding type plug has two blades and a third grounding prong. The third prong is provided for your safety. If the provided plug does not fit into your outlet, consult an electrician for replacement of the obsolete outlet.
10. Protect power cords from being walked on or pinched particularly at plugs, convenience receptacles, and the point where they exit the apparatus.
11. Only use attachments and accessories specified by Void

A70 Bit 10 BDC BT8 05a175 0 Ma g (ind-6)/2C ID 158 Mo pe ch BT cK BDC B173,(clapo3,(brac2 (oTmK 0 0 8tab3.1y use a)3.1 C BT8 0 0 8 50.1732 369.1039 TmI

2 Unpacking and Checking

All Void Acoustics products are carefully manufactured and thoroughly tested before being despatched. Your dealer will ensure that your Void products are in pristine condition before being forwarded to you but mistakes and accidents can happen.

Before signing for your delivery:

- Inspect your shipment for any signs of contamination, abuse or transit damage as soon as you receive it
- Check your Void Acoustics delivery fully against your order
- If your shipment is incomplete or any of its contents are found to be damaged; inform the shipping company and inform your dealer.

When you are removing your Venu V2 loudspeaker from its original packaging:

- All Venu V2 loudspeakers come double boxed and each box is stapled shut; take care when unboxing and removing the staples to avoid injury or damage to the loudspeaker
- If you need to place the Venu V2 loudspeaker on a flat surface ensure you use a lint free product to protect the finish
- When you have removed the Venu V2 loudspeaker from the packaging inspect it to ensure there is no damage and keep all original packaging in case it needs to be returned for any reason.

See section 1.5 for warranty conditions and see section 6 if your product needs servicing.

3 About

3.1 Welcome

Many thanks for purchasing this Void Acoustics Venu V2 Series loudspeaker. We truly appreciate your support. At Void, we design, manufacture and distribute advanced professional audio systems for the installed and live sound market sectors. Like all Void products, our highly skilled and experienced engineers have successfully combined pioneering technologies with groundbreaking design aesthetics, to bring you superior sound quality and visual innovation. In buying this product, you are now part of the Void family and we hope using it brings you years of satisfaction. This guide will help you both use this product safely and ensure it performs to its full capability.

3.2 Venu V2 Series overview

The Venu V2 series has been ingeniously redesigned to ensure this winning range of loudspeakers exceeds the expectation of leading sound installation contractors and integrators around the world. A full, sleek aesthetic overhaul, coupled with functional revisions, makes this series even more attractive and versatile than ever before. With so many different sizes and power capabilities, you can confidently meet any venue's sound specifications using Venu products.

Passive two-way surface mount loudspeakers:

- Venu 6 V2
- Venu 8 V2
- Venu 10 V2
- Venu 12 V2
- Venu 15 V2

Low frequency loudspeakers:

- Venu 112 V2
- Venu 212 V2
- Venu 115 V2
- Venu 215 V2
- Venu 208

4 Cable and Wiring

4.1 Electrical safety

To avoid electrical hazards please note the following:

- Do not access the inside of any electrical equipment. Refer servicing to Void-approved service agents.

4.2 Cable considerations for fixed installations

We recommend specifying installation-grade Low Smoke Zero Halogen (LSZH) cables for permanent installations. The cables should use Oxygen Free Copper (OFC) of grade C11000 or above. Cables for permanent installations should be compliant with the following standards:

- IEC 60332.1 Fire retardancy of a single cable
- IEC 60332.3C Fire retardancy of bunched cables
- IEC 60754.1 Amount of Halogen Gas Emissions
- IEC 60754.2 Degree of acidity of released gases
- IEC 61034.2 Measurement of smoke density.

We suggest using the following maximum copper cable lengths to keep level losses below 0.6 dB.

Metric mm^2	Imperial AWG	8 Ω load	4 Ω load	2 Ω load
2.50 mm^2	13 AWG	36 m	18 m	9 m
4.00 mm^2	11 AWG	60 m	30 m	15 m

4.3 Phoenix connector

Figure 4.1 shows the rear panel of a Venu Series V2 loudspeaker with the polarity of the Phoenix connector labelled. From left to right it is - and + for the feed to the drivers and the - and + for the link/out.

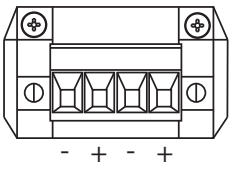

Figure 4.1: Phoenix connector polarity

4 Cable and Wiring

4.4 Venu 6, 8, 10, 12 and 15 V2 wiring

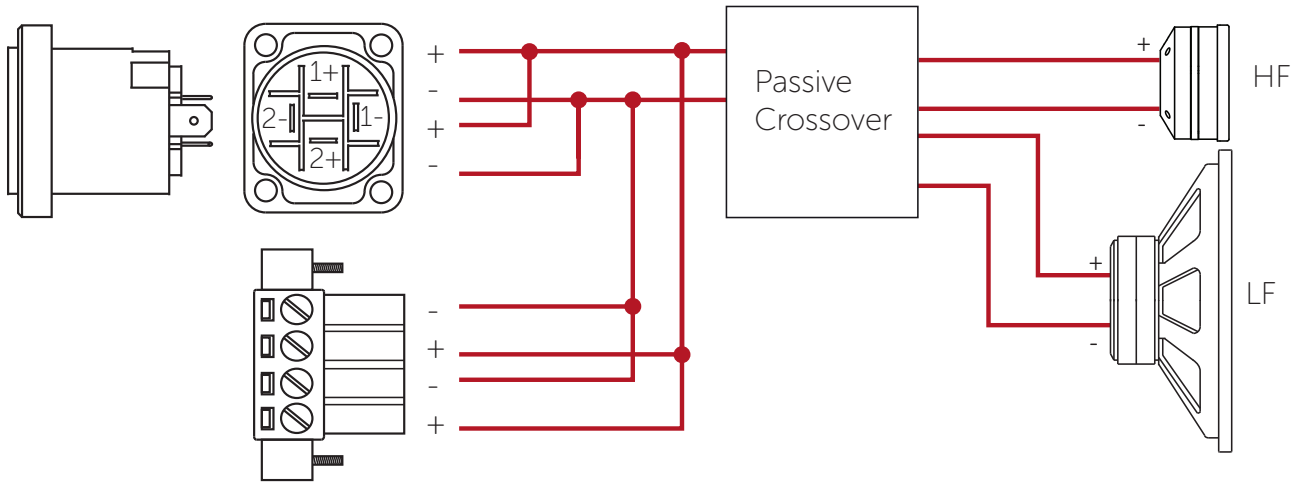

Figure 4.2: Loudspeaker wiring diagram

	speakON™ pins 1+/1-	speakON™ pins 2+/2-
Venu 6 V2	1" HF and 6.5" LF	Link/out
Venu 8 V2	1" HF and 8" LF	Link/out
Venu 10 V2	1" HF and 10" LF	Link/out
Venu 12 V2	1" HF and 12" LF	Link/out
Venu 15 V2	1" HF and 15" LF	Link/out

4.5 Venu 112 and 115 V2 wiring

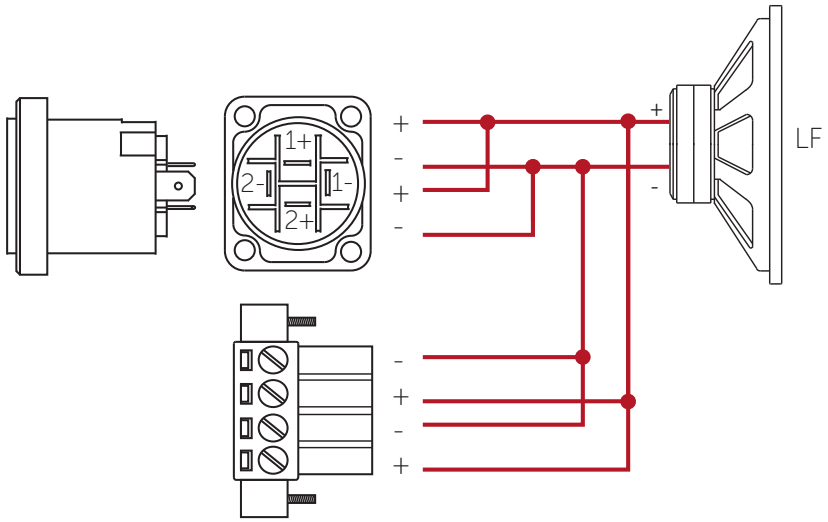

Figure 4.3: Single low frequency loudspeaker wiring diagram

	speakON™ pins 1+/1-	speakON™ pins 2+/2-
Venu 112 V2	12″ LF	Link/out
Venu 115 V2	15″ LF	Link/out

4.6 Venu 212 and 215 V2 wiring

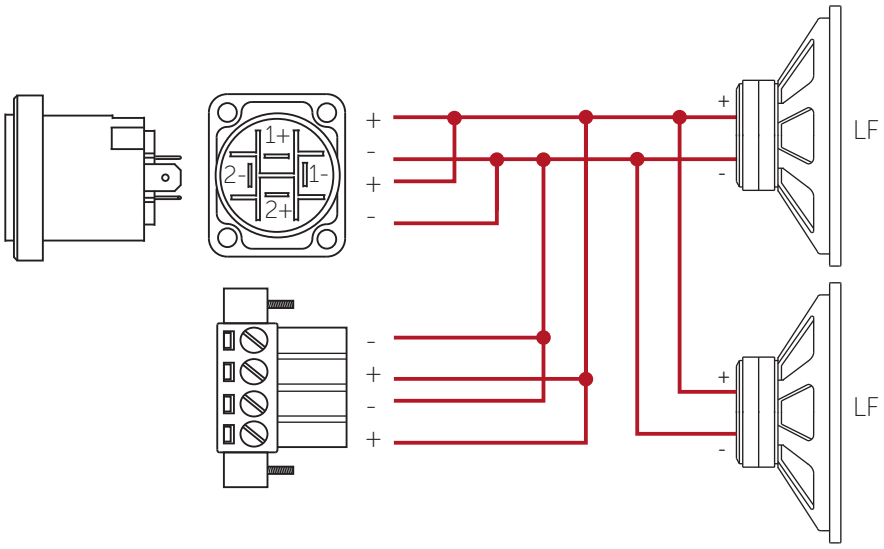

Figure 4.4: Dual low frequency loudspeaker wiring diagram

	speakON™ pins 1+/1-	speakON™ pins 2+/2-
Venu 212 V2	2 x 12″ LF	Link/out
Venu 215 V2	2 x 15″ LF	Link/out

4 Cable and Wiring

4.7 Venu 208 wiring

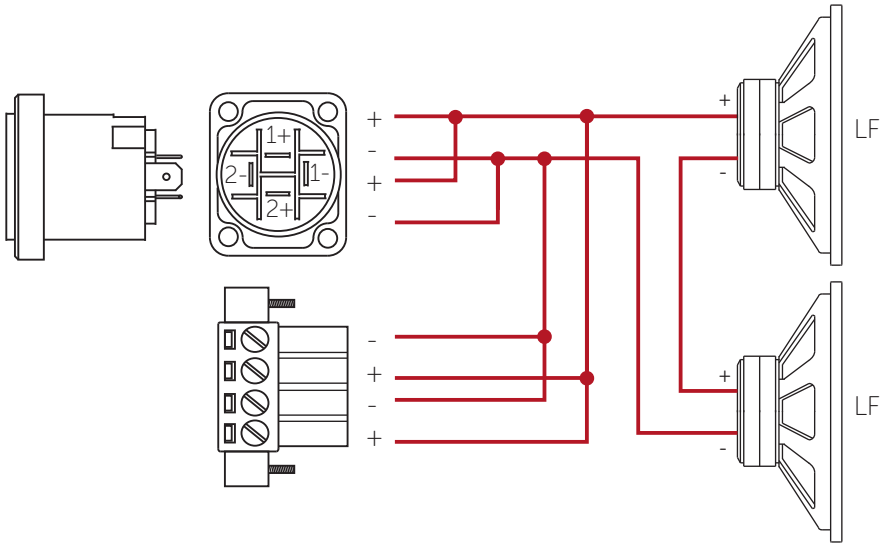

Figure 4.5: Venu 208 wiring diagram

	speakON™ pins 1+/1-	speakON™ pins 2+/2-
Venu 208 V2	2 x 8" LF	Link/out

4.8 Venu V2 amplifier to Phoenix wiring

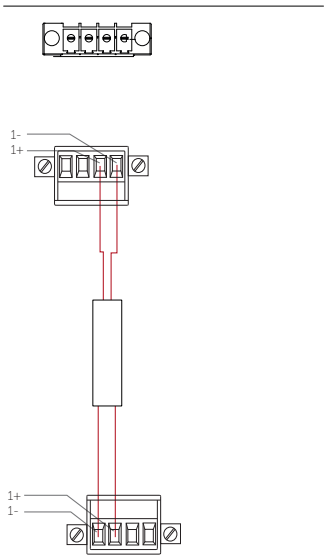

4 Cable and Wiring

4.9 Venu V2 amplifier to speakON™ wiring

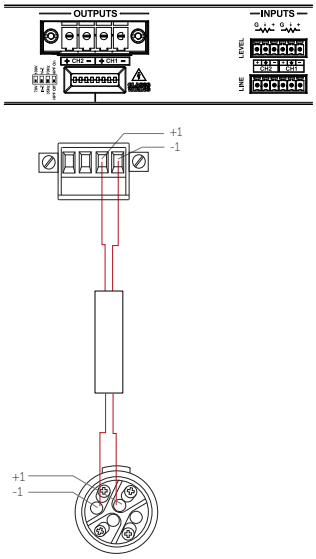

Figure 4.9: Bias D1 Phoenix wiring

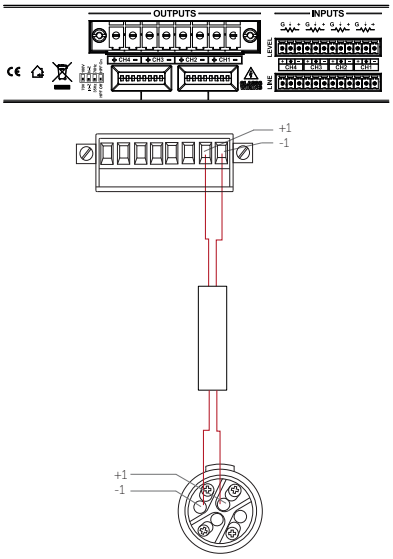

Figure 4.10: Bias Q1/Q2 Phoenix wiring

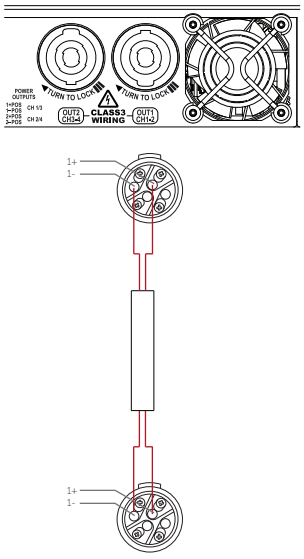

Figure 4.11: Bias Q5 speakON™ wiring

Bias D1/Q1/Q2/Q5	Output 1
Max parallel units (Venu 6/8/10/12/15/112/115/208 V2)	4 (2 Ω load to amplifier)
Max parallel units (Venu 212/215 V2)	2 (2 Ω load to amplifier)

Connecting a 4 core speakON™ cable directly from a Bias Q5 to a Venu V2 loudspeaker will short circuit the amplifier and cause it to go into protect. Use either a 2 core speakON™ cable or a patch panel to split the amplifier channels.

5 Mounting

5.1 Installation safety

To avoid mechanical hazards, please note the following:



- Safety regulations vary in different regions. Full compliance with those regulations must be your priority
- Installations must only be undertaken by fully qualified and experienced engineers/technicians who understand local regulations
- This may include consulting a structural engineer before installation of wall brackets
- Remember that all personnel have a duty of care to themselves, to their assistants, to the venue staff and to the public
- Before lifting any part of the system above head height, check the whole rig for loose tools or other items that may fall and cause injury
- Do not use a telephone (even if hands-free) whilst installing. Always concentrate fully on the installation operation
- Do not install equipment that is worn, damaged, corroded, mishandled or over-stressed in any way
- Use only Void-approved mounting equipment and accessories
- Secondary safeties should be provided in all instances where cabinets are flying or fixing overhead and should conform to local regulations

5.2 Wall Mounting in Portrait Mode

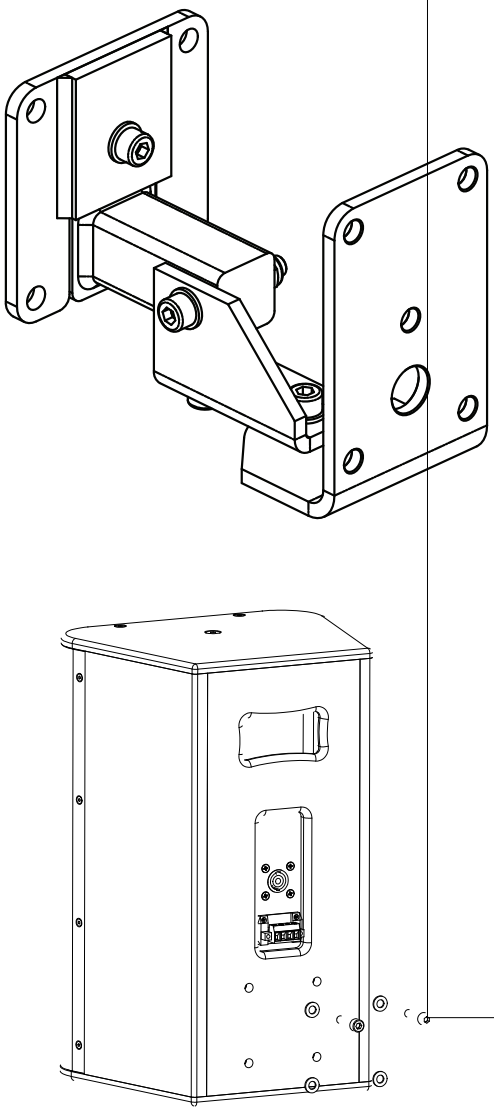

5.2 Wall Mounting in Portrait Mode

Step 3:
Attach the front of the bracket assembly to the rear of the loudspeaker using all four M8 bolts.

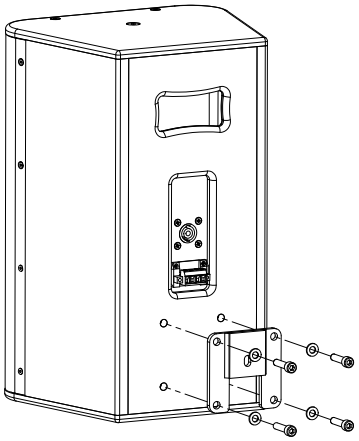

Figure 5.4: Attaching bracket to loudspeaker

Step 4:
Lower the speaker assembly on to the rear of the bracket assembly and fix the bolt into the rear of assembly.

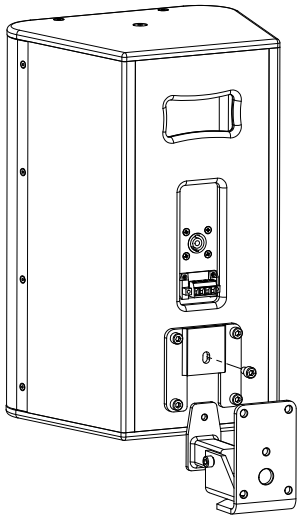

Figure 5.5: Attaching loudspeaker to bracket

Step 5:
Adjust the bracket in the horizontal axis by loosening the bolt at the rear of the assembly (figure 5.6a) and in the vertical axis by adjusting the bolt on the base of the assembly (figure 5.6b).

Maximum rotation		
	Horizontal	Vertical
Venu 6	76°	40°
Venu 8	70°	40°
Venu 10	63°	40°
Venu 12	72°	40°
Venu 15	61°	40°

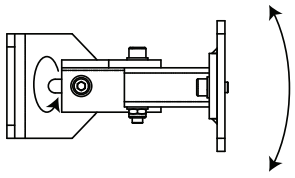

Figure 5.6a: Bracket adjustment

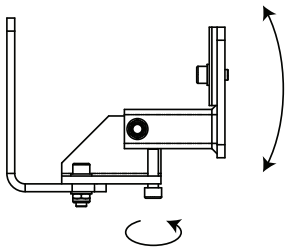

Figure 5.6b: Bracket adjustment

5.3 Wall Mounting in Landscape Mode

Parts required (see Appendix D for part numbers):

- T80 wall bracket (Venu 6, 8 V2)
- T80XL wall bracket (Venu 10, 12, 15 V2)

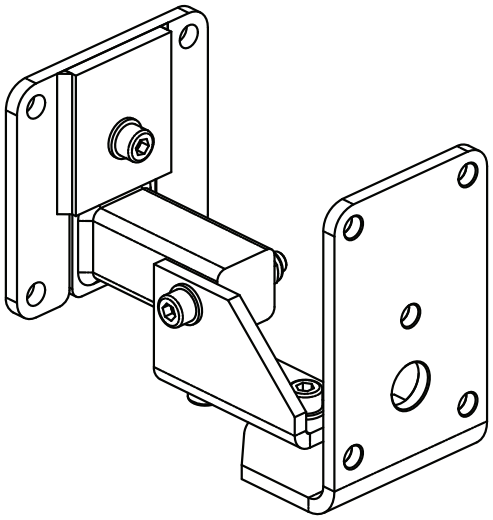

Figure 5.7: T80 wall bracket

Step 1:
After rotating the horn, as described in section 7.6, remove all four M8 bolts from the rear of the loudspeaker.

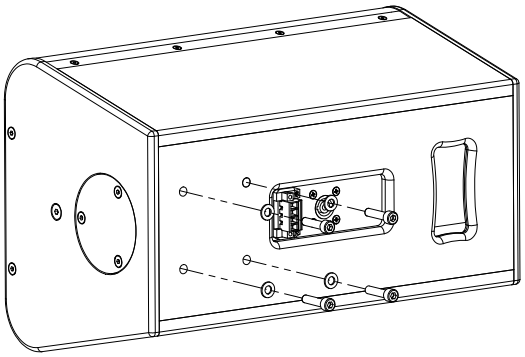

Figure 5.8: Venu bolt removal

Step 2:
Remove the front of the bracket from the main bracket assembly. Attach the rear of the bracket assembly to the wall making sure all 4 bolts are fitted.

Take care when mounting the bracket to the wall, making sure to use the correct fixing and that the wall can take the load.

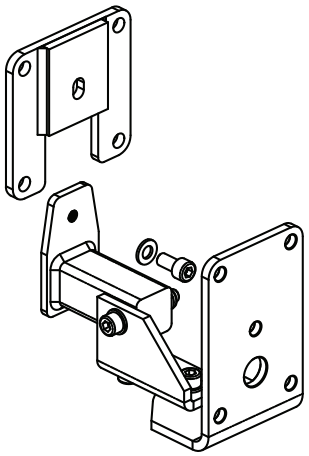

Figure 5.9: Deconstructing the bracket assembly

5.3 Wall Mounting in Landscape Mode

Step 3:
Attach the front of the bracket assembly to the rear of the loudspeaker using all four M8 bolts.

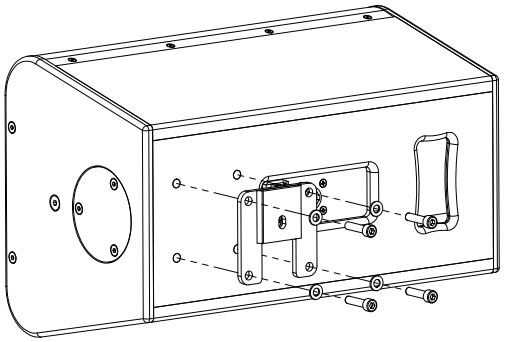

Figure 5.10: Attaching bracket to loudspeaker

Step 4:
Lower the speaker assembly on to the rear of the bracket assembly and adjust the bracket so that loudspeaker is in the required position.

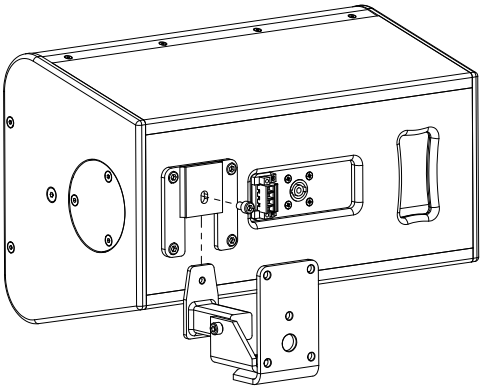

Figure 5.11: Loudspeaker positioning

Step 5:
Adjust the bracket in the horizontal axis by loosening the bolt at the rear of the assembly (figure 5.12a) and in the vertical axis by adjusting the bolt on the base of the assembly (figure 5.12b).

Maximum rotation		
	Horizontal	Vertical
Venu 6	65°	40°
Venu 8	56°	40°
Venu 10	85°	40°
Venu 12	65°	40°
Venu 15	33°	40°

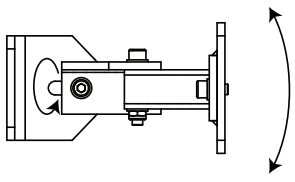

Figure 5.12a: Bracket adjustment

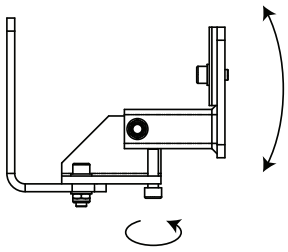

Figure 5.12b: Bracket adjustment

5.4 High Frequency Enclosure Ceiling Mount

Parts required (see Appendix D for part numbers):

- T80 - Ceiling Bracket (350mm)

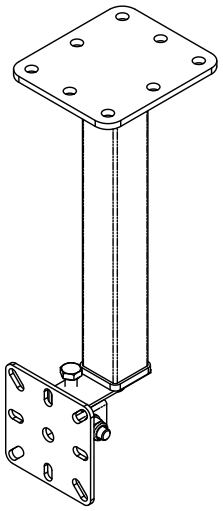

Figure 5.13: T80 - Ceiling Bracket

Step 1:
Remove all the M12 bolt from the bracket.

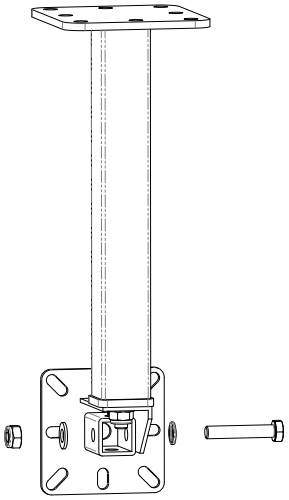

Figure 5.14: Venu bolt removal

Step 2:
Remove all four M8 bolts from the rear of the loudspeaker. Attach the bracket plate using all four M8 bolts.

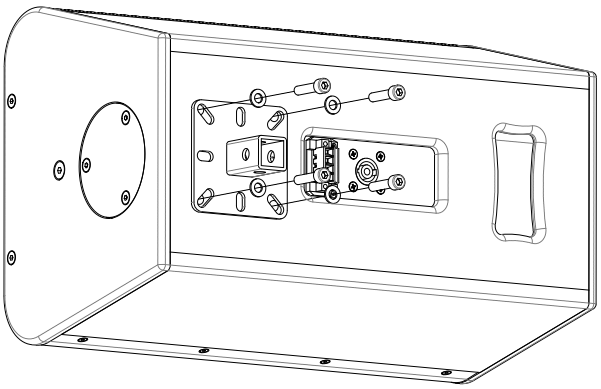

Figure 5.15: Fixing bracket

5.4 High Frequency Enclosure Ceiling Mount

Step 3:
With the bracket in position raise the loudspeaker into position and reattach the M12 bolt.

Take care when mounting the bracket to the ceiling, making sure to use the correct fixing and that the ceiling can take the load,

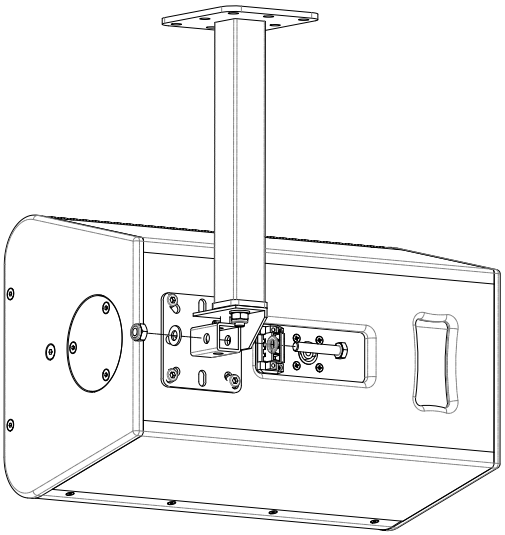

Figure 5.16: Attaching bracket to loudspeaker

Step 4:
Tighten the M10 bolt on the bracket to fix the loudspeaker in position. Maximum vertical adjustment is 32°.

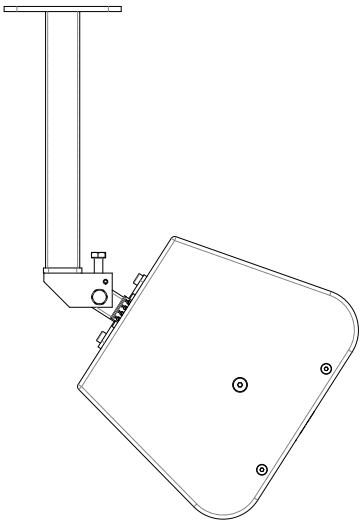

Figure 5.17: Loudspeaker positioning

5.5 Yoke Bracket Mounting

Parts required (see Appendix D for part numbers):

- Venu series yoke bracket (Venu 6, 8, 10, 12, 15, 112, 212, 115,208 V2)

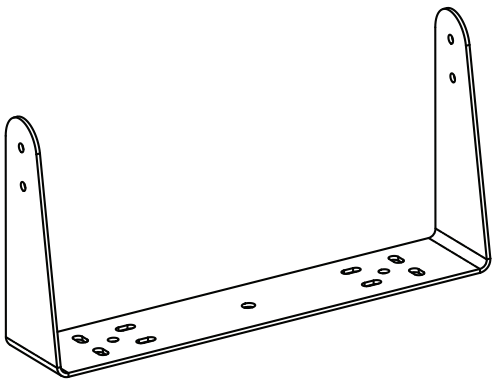

Figure 5.18: Venu series yoke bracket

Step 1:
Begin by fixing the yoke by the central bolt hole and adjusting the position until the yoke is in the required position.

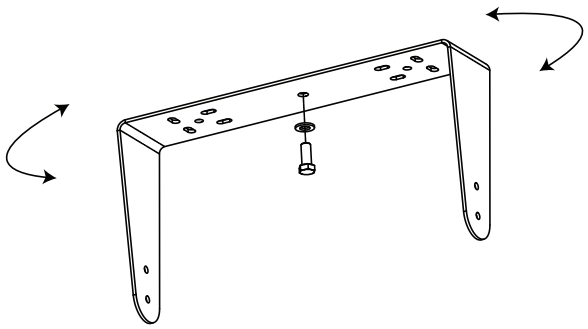

Figure 5.19: Yoke adjustment

Step 2:
Fix the yoke into position by fitting the remaining bolts.

Take care when mounting the yoke to the wall/ceiling, making sure to use the correct fixing and that it can take the load.

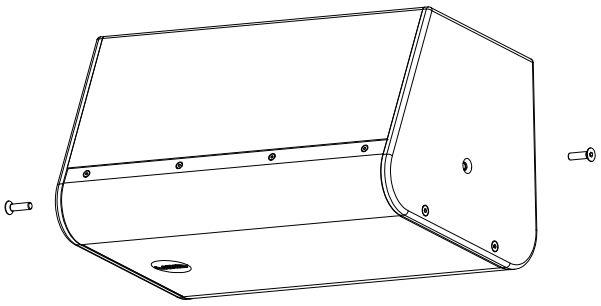

Figure 5.20: Yoke fixing

5.5 Yoke Bracket Mounting

Step 3:
Remove the countersunk M8 bolts from the top and bottom of the loudspeaker.

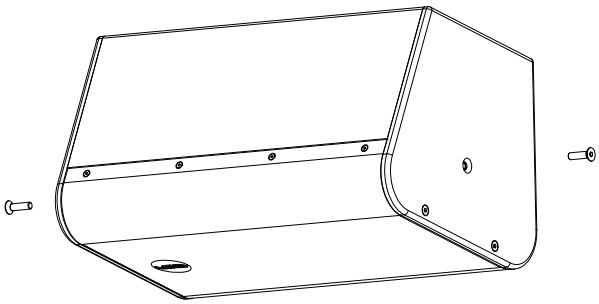

Figure 5.21: Venu series yoke bracket

Step 4:
Lift the loudspeaker into position. Do NOT use the countersunk M8 bolts from the Venu loudspeaker but instead use the M8 bolts supplied with the yoke bracket. Fit the M8 bolts but do not tighten.

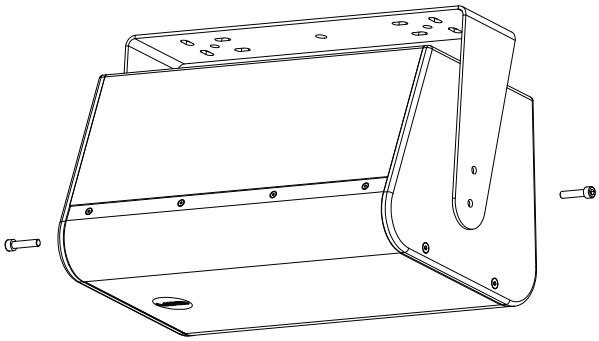

Figure 5.22: Loudspeaker fitting

Step 5:
Rotate the loudspeaker into position and then tighten the bolts.

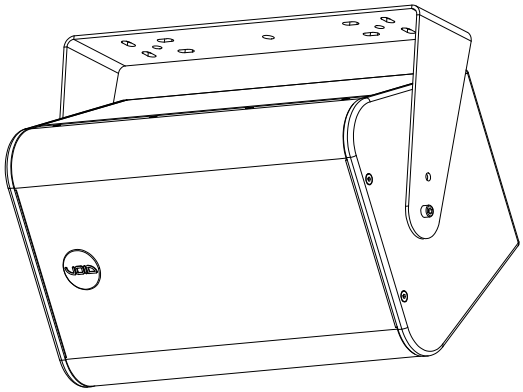

Figure 5.23: Loudspeaker positioning

5.5 Yoke Bracket Mounting

Step 3:
Remove the countersunk M8 bolts from the top and bottom of the loudspeaker.

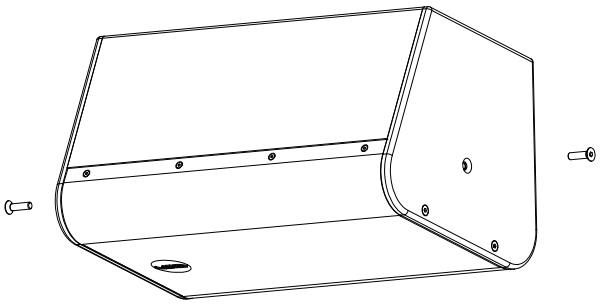

Figure 5.21: Venu series yoke bracket

Step 4:
Lift the loudspeaker into position. Do NOT use the countersunk M8 bolts from the Venu loudspeaker but instead use the M8 bolts supplied with the yoke bracket. Fit the M8 bolts but do not tighten.

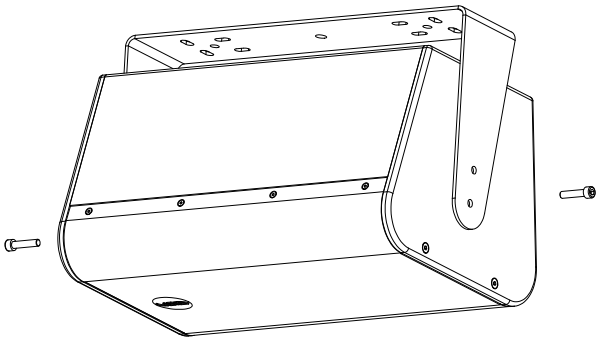

Figure 5.22: Loudspeaker fitting

Step 5:
Rotate the loudspeaker into position and then tighten the bolts.

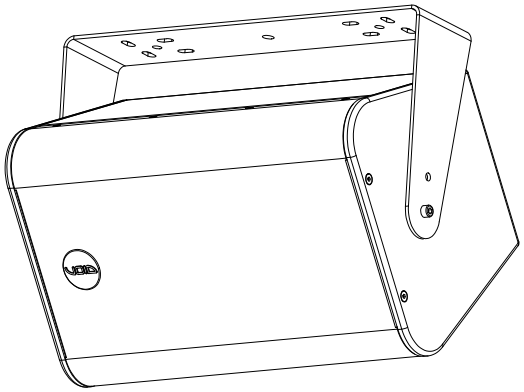

Figure 5.23: Loudspeaker positioning

5.6 Horn Rotation

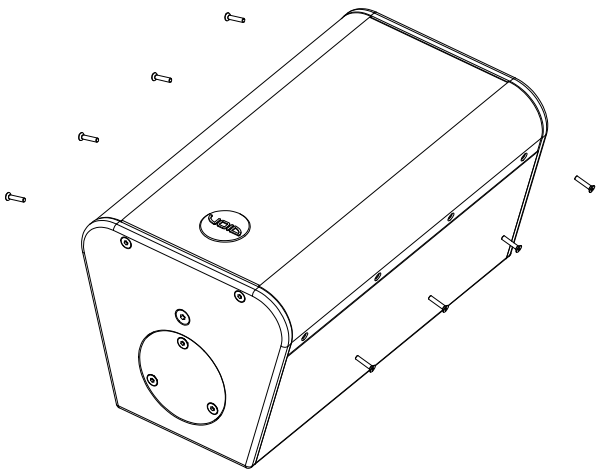

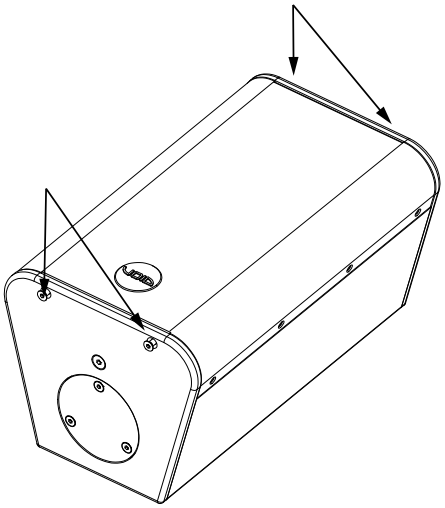

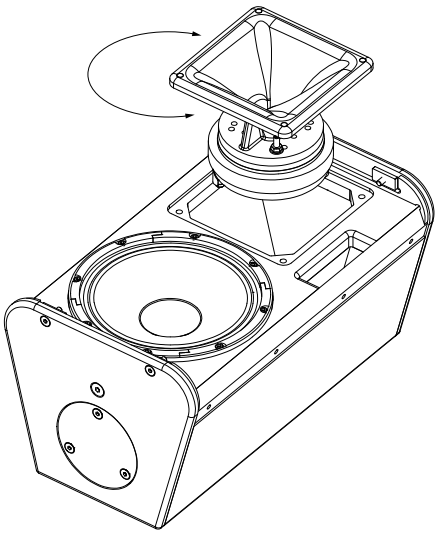

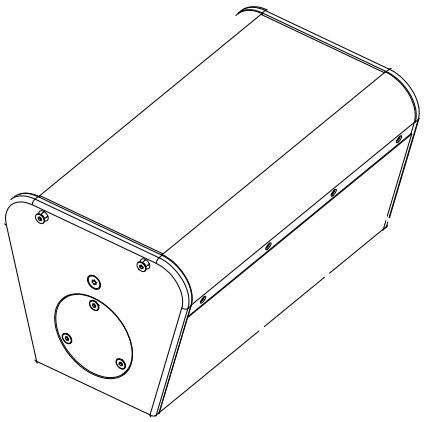

5.7 Low Frequency Enclosure Wall Mount

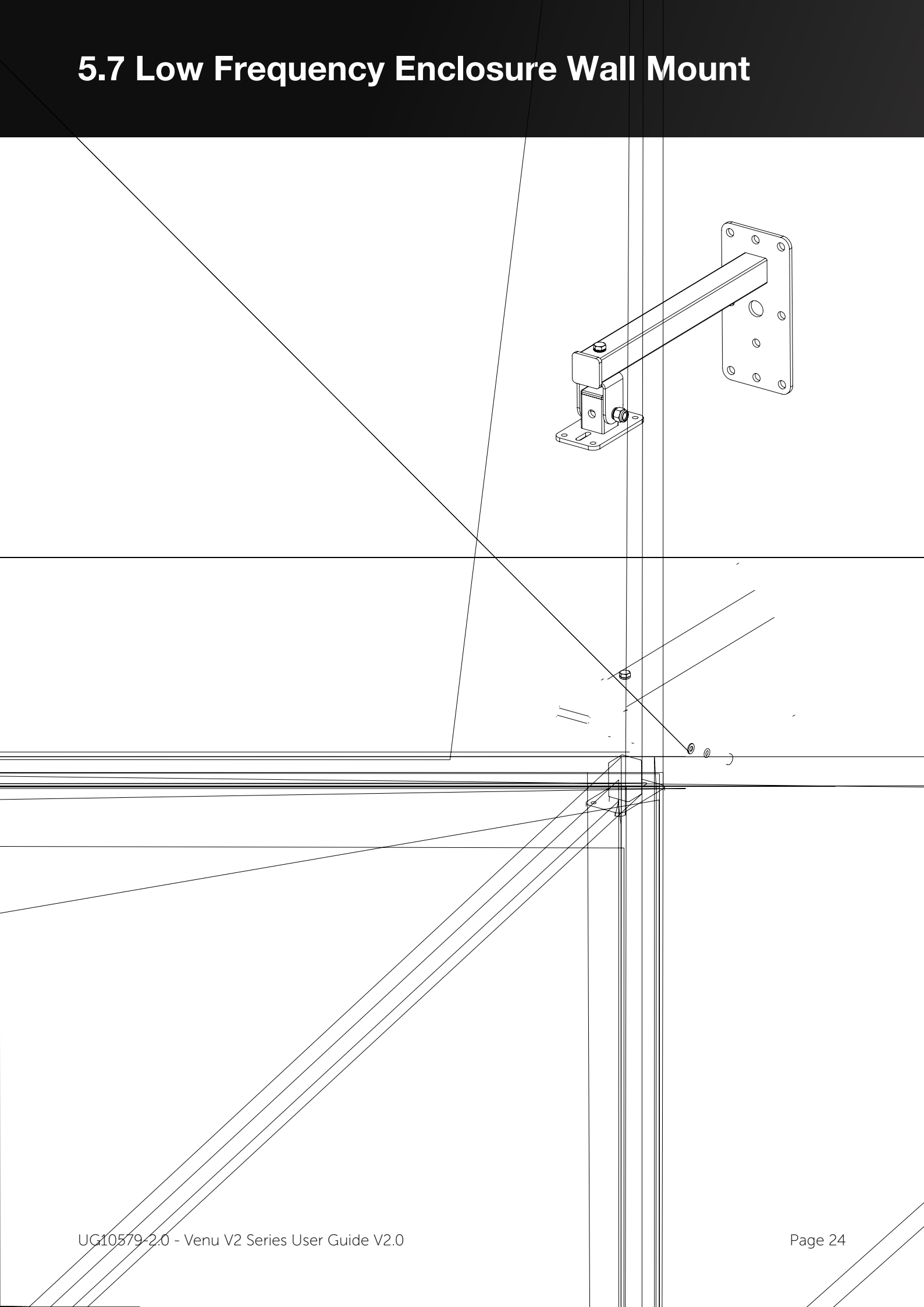

5.7 Low Frequency Enclosure Wall Mount

Step 4:
Attach the type 75 plate to the loudspeaker using the M8 socket cap bolts supplied with the bracket.

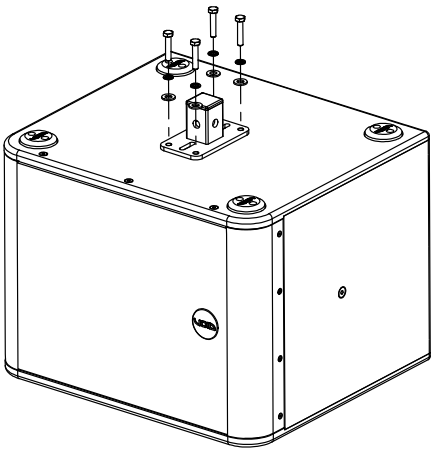

Figure 5.33: Attaching the type 75 plate

Step 5:
Raise the loudspeaker into position and attach the M12 nut.

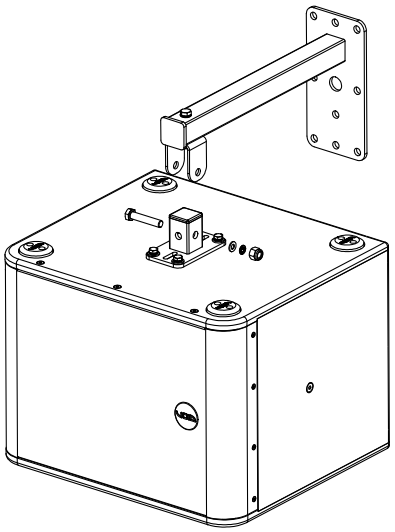

Figure 5.34: Loudspeaker fixing

Step 6:
Rotate the loudspeaker into the desired position and tighten the M12 bolt.

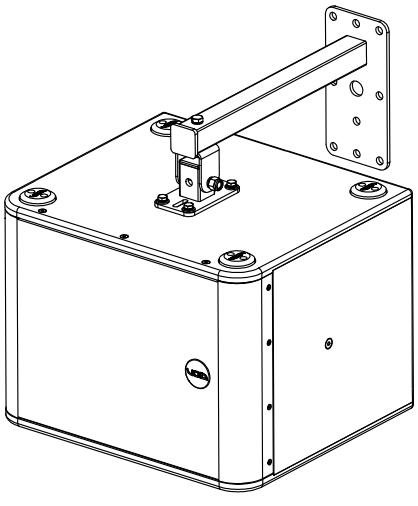

Figure 5.35: Loudspeaker positioning

5.8 Low Frequency Enclosure Ceiling Mount

For use with:
Venu 112/115/208 V2

Part required (see Appendix D for part numbers):
T75 - Ceiling Bracket

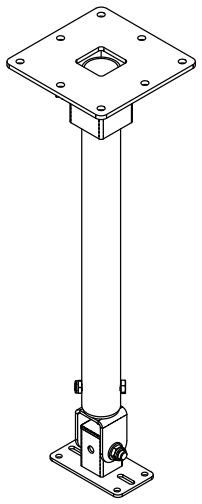

Figure 5.36: T75 - Ceiling Bracket

Step 1:
Remove the type 75 plate from the T75 - Ceiling Bracket by removing the M12 bolt.

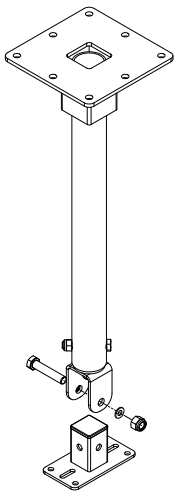

Figure 5.37: Nut removal

Step 2:
Remove all four M8 counter sink bolts from the bottom of the loudspeaker

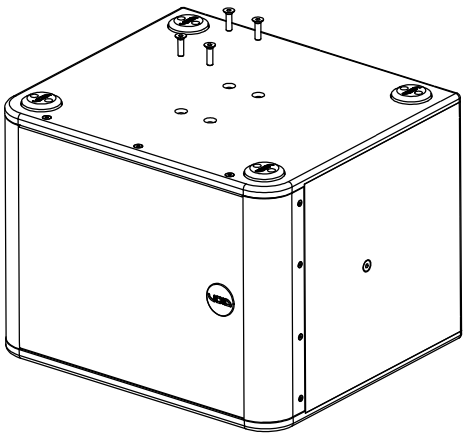

Figure 5.38: Bolt removal

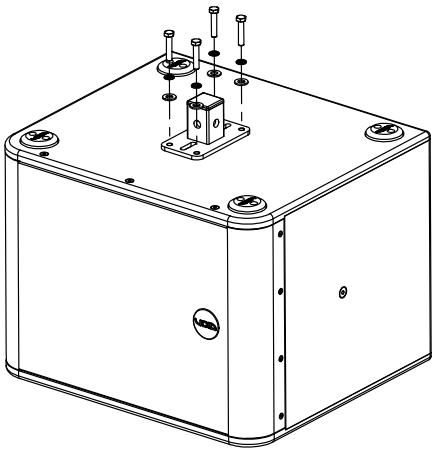

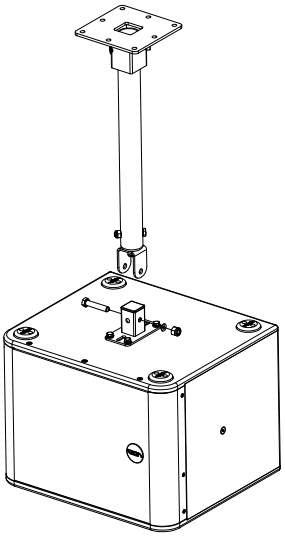

5.9 Top Hat Installation for Low Frequency Enclosures

For use with:
Venu 112/212/115/215 V2

Part required (see Appendix D for part numbers):
Heavy Duty Top Hat

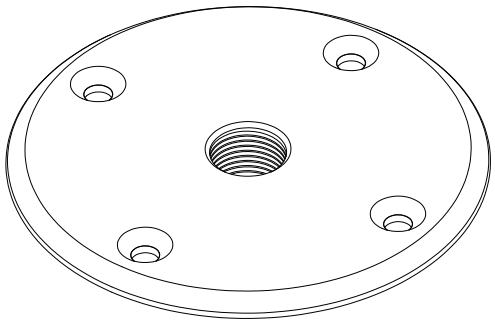

Figure 5.42: Heavy duty top hat

Step 1:
Remove all four M6 bolts and remove the cover plate.

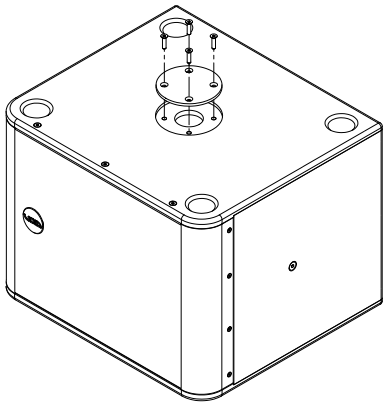

Figure 5.43: Cover plate removal

Step 2:
Insert the Heavy Duty Top Hat and replace all four M6 bolts.

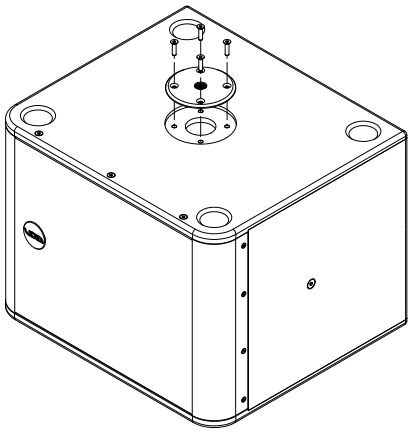

Figure 5.44: Top hat placement

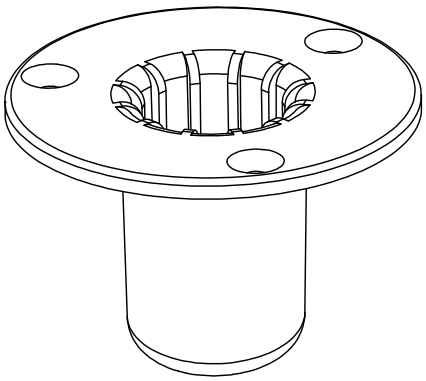

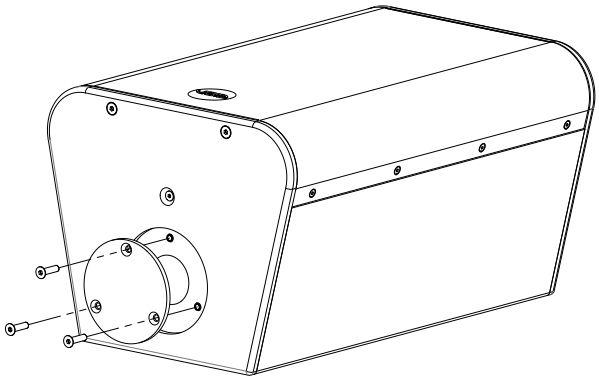

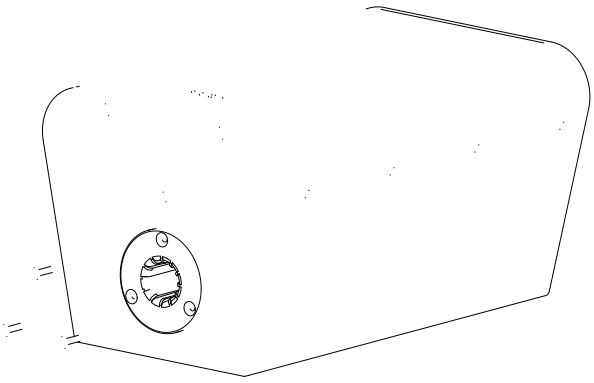

6 Service

Void Venu V2 Series loudspeakers should only be serviced by a fully-trained technician.



No user serviceable parts inside. Refer servicing to your dealer.

6.1 Return authorisation

Before returning your faulty product for repair, please remember to get an R.A.N. (Return Authorisation Number) from the Void dealer who supplied the system to you. Your dealer will handle the necessary paperwork and repair. Failure to go through this return authorisation procedure could delay the repair of your product.

Note that your dealer will need to see a copy of your sales receipt as proof of purchase so please have this to hand when applying for return authorisation.

6.2 Shipping and packing considerations

- When sending a Void Venu V2 Series loudspeaker to an authorised service centre, please write a detailed description of the fault and list any other equipment used in conjunction with the faulty product.
- Accessories will not be required. Do not send the instruction manual, cables or any other hardware unless your dealer asks you to.
- Pack your unit in the original factory packaging if possible. Include a note of the fault description with the product. Do not send it separately.
- Ensure safe transportation of your unit to the authorised service centre.

7 Appendix A: Specifications

A.1 Venu 6 V2 specifications

Frequency response	75 Hz - 19 kHz ±3 dB
Efficiency[1]	95 dB 1W/1m
Nominal impedance	8 Ω
Power handling[2]	200 W AES
Maximum output[3]	118 dB cont, 121 dB peak
Driver configuration	1 x 6.5" LF, 1 x 1" HF compression driver
Dispersion	90°H x 60°V rotatable
Connectors	1 x Phoenix with link out 1 x speakON™ with link out
Height	372 mm (14.6")
Width	224 mm (8.8")
Depth	202 mm (8")
Weight	9.5 kg (20.9 lbs)
Enclosure	15 mm birch plywood
Finish	Textured polyurethane
Grille	Perforated steel with foam filter
Mounting	Yoke bracket positions 4 x M8 fixing points for type 80 plate Optional top hat

[1] Measured in half space [2] AES2 - 1984 compliant [3] Calculated

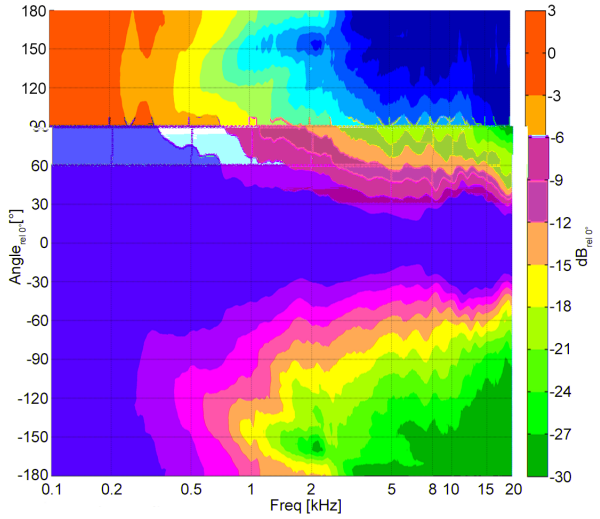

Figure A.1: Horizontal directivity isobars

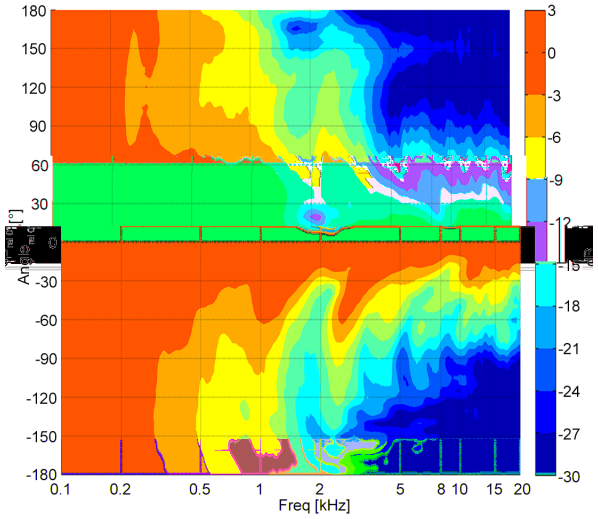

Figure A.2: Vertical directivity isobars

7 Appendix A: Specifications

A.2 Venu 8 V2 specifications

Frequency response	70 Hz - 20 kHz ±3 dB
Efficiency[1]	97 dB 1W/1m
Nominal impedance	8 Ω
Power handling[2]	300 W AES
Maximum output[3]	121 dB cont, 124 dB peak
Driver configuration	1 x 8" LF, 1 x 1" HF compression driver
Dispersion	90°-40°H x 60°V rotatable
Connectors	1 x Phoenix with link out 1 x speakON™ with link out
Height	415 mm (16.3")
Width	245 mm (9.6")
Depth	228 mm (9")
Weight	12 kg (26.5 lbs)
Enclosure	15 mm birch plywood
Finish	Textured polyurethane
Grille	Perforated steel with foam filter
Mounting	Yoke bracket positions 4 x M8 fixing points for type 80 plate Optional top hat

[1] Measured in half space [2] AES2 - 1984 compliant [3] Calculated

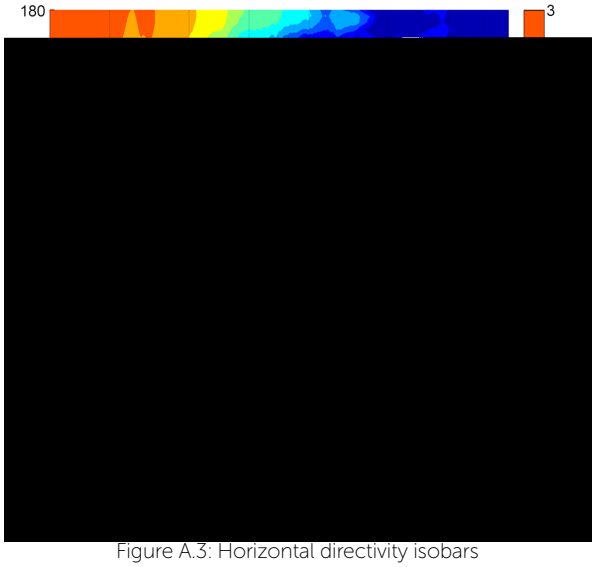

Figure A.3: Horizontal directivity isobars

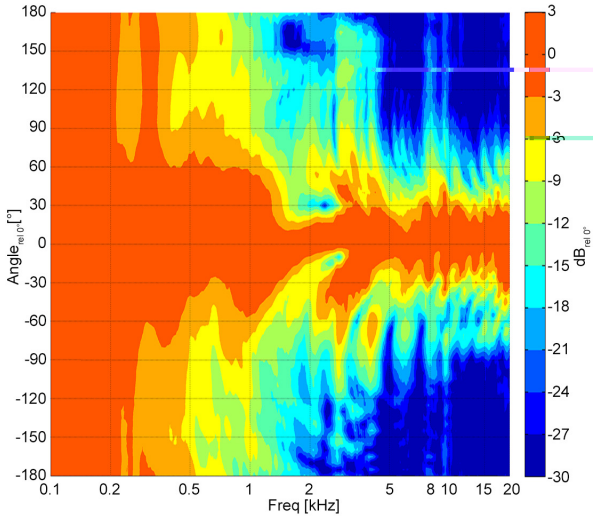

Figure A.4: Vertical directivity isobars

7 Appendix A: Specifications

A.3 Venu 10 V2 specifications

Frequency response	65 Hz - 20 kHz ±3 dB
Efficiency[1]	97 dB 1W/1m
Nominal impedance	8 Ω
Power handling[2]	350 W AES
Maximum output[3]	123 dB cont, 126 dB peak
Driver configuration	1 x 10" LF, 1 x 1" HF compression driver
Dispersion	90°-40°H x 60°V rotatable
Connectors	1 x Phoenix with link out 1 x speakON™ with link out
Height	469 mm (18.5")
Width	301 mm (11.9")
Depth	260 mm (10.2")
Weight	16 kg (35.3 lbs)
Enclosure	15 mm birch plywood
Finish	Textured polyurethane
Grille	Perforated steel with foam filter
Mounting	Yoke bracket positions 4 x M8 fixing points for type 80 plate Optional top hat

[1] Measured in half space [2] AES2 - 1984 compliant [3] Calculated

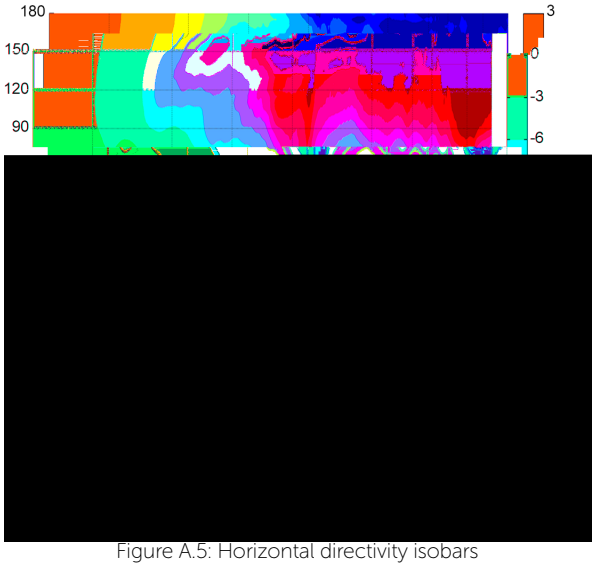

Figure A.5: Horizontal directivity isobars

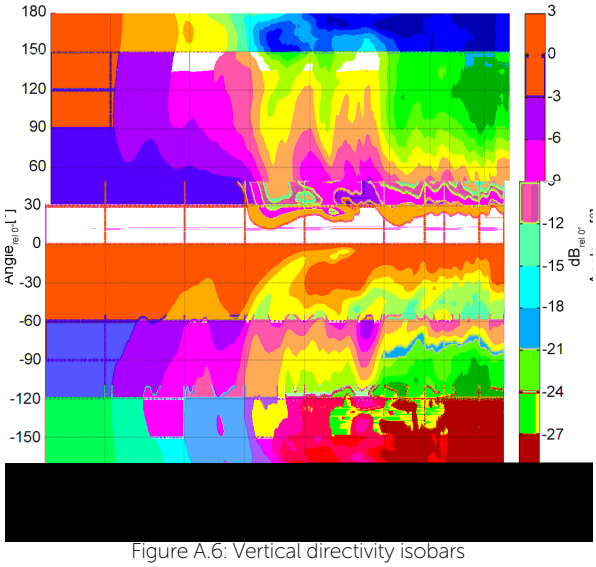

Figure A.6: Vertical directivity isobars

7 Appendix A: Specifications

A.4 Venu 12 V2 specifications

Frequency response	60 Hz - 20 kHz ±3 dB
Efficiency[1]	98 dB 1W/1m
Nominal impedance	8 Ω
Power handling[2]	400 W AES
Maximum output[3]	124 dB cont, 127 dB peak
Driver configuration	1 x 12" LF, 1 x 1" HF compression driver
Dispersion	90°-40°H x 60°V rotatable
Connectors	1 x Phoenix with link out 1 x speakON™ with link out
Height	522 mm (20.6")
Width	370 mm (14.6")
Depth	340 mm (13.4")
Weight	22 kg (48.5 lbs)
Enclosure	15 mm birch plywood
Finish	Textured polyurethane
Grille	Perforated steel with foam filter
Mounting	Yoke bracket positions 4 x M8 fixing points for type 80 plate Optional top hat

[1] Measured in half space [2] AES2 - 1984 compliant [3] Calculated

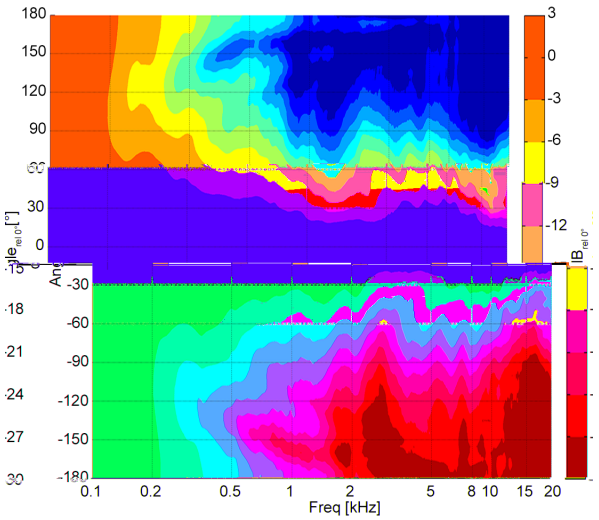

Figure A.7: Horizontal directivity isobars

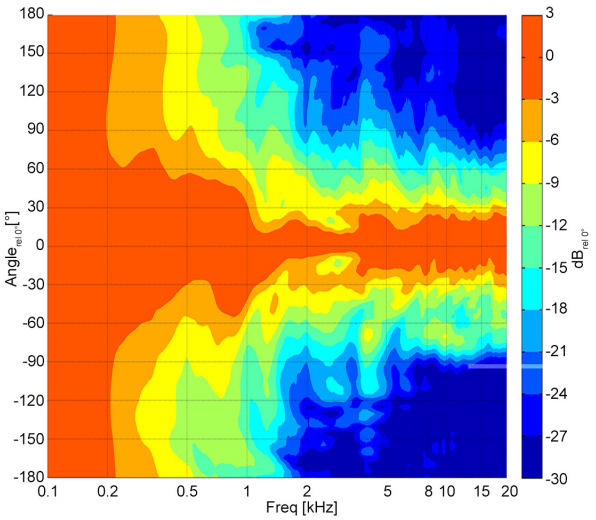

Figure A.8: Vertical directivity isobars

7 Appendix A: Specifications

A.5 Venu 15 V2 specifications

Frequency response	50 Hz - 20 kHz ±3 dB
Efficiency[1]	99 dB 1W/1m
Nominal impedance	8 Ω
Power handling[2]	450 W AES
Maximum output[3]	125 dB cont, 128 dB peak
Driver configuration	1 x 15" LF, 1 x 1" HF compression driver
Dispersion	90°-40°H x 60°V rotatable
Connectors	1 x Phoenix with link out 1 x speakON™ with link out
Height	670 mm (26.4")
Width	458 mm (18")
Depth	381 mm (15")
Weight	31 kg (68.3 lbs)
Enclosure	15 mm birch plywood
Finish	Textured polyurethane
Grille	Perforated steel with foam filter
Mounting	Yoke bracket positions 4 x M8 fixing points for type 80 plate Optional top hat

[1] Measured in half space [2] AES2 - 1984 compliant [3] Calculated

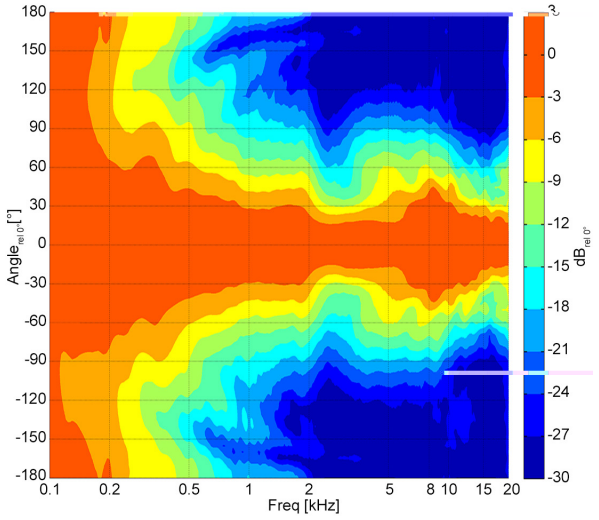

Figure A.9: Horizontal directivity isobars

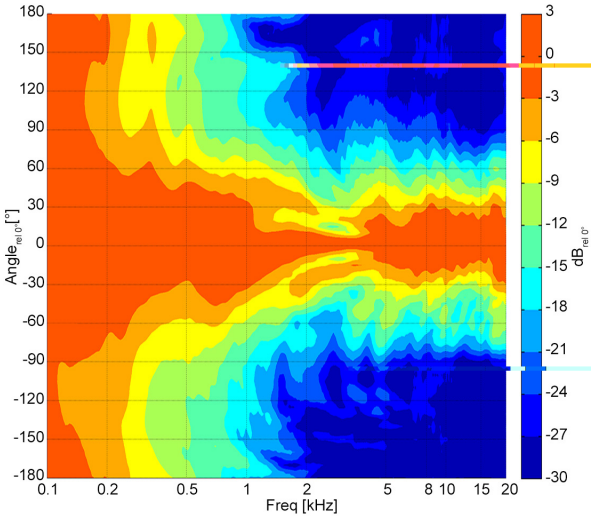

Figure A.10: Vertical directivity isobars

7 Appendix A: Specifications

A.5 Venu 112 V2 specifications

Frequency response	40 Hz - 160 Hz ±3 dB
Efficiency[1]	99 dB 1W/1m
Nominal impedance	8 Ω
Power handling[2]	600 W AES
Maximum output[3]	123 dB cont, 129 dB peak
Driver configuration	1 x 12" LF
Connectors	1 x Phoenix with link out 1 x speakON™ with link out
Height	370 mm (14.6")
Width	490 mm (19.3")
Depth	430 mm (16.9")
Weight	24 kg (52.9 lbs)
Enclosure	15 mm birch plywood
Finish	Textured polyurethane
Grille	Perforated steel with foam filter
Mounting	Yoke bracket positions 4 x M8 bolts for type 75 plate Optional M20 top hat for pole mount

[1] Measured in half space [2] AES2 - 1984 compliant [3] Calculated

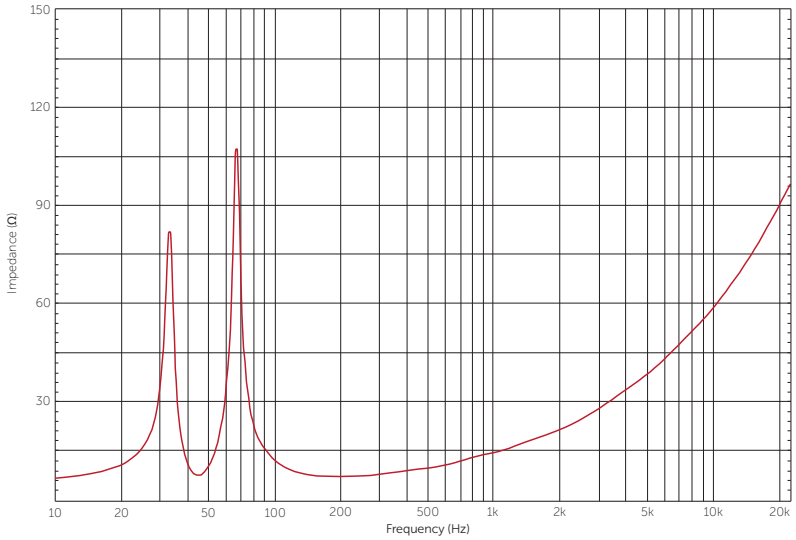

Figure A.11: Venu 112 V2 impedance graph

7 Appendix A: Specifications

A.6 Venu 212 V2 specifications

Frequency response	34 Hz - 160 Hz ±3 dB
Efficiency[1]	99 dB 1W/1m
Nominal impedance	4 Ω
Power handling[2]	1200 W AES
Maximum output[3]	128 dB cont, 134 dB peak
Driver configuration	2 x 12" LF
Connectors	1 x Phoenix with link out 1 x speakON™ with link out
Height	370 mm (14.6")
Width	780 mm (30.7")
Depth	490 mm (19.3")
Weight	47.5 kg (104.7 lbs)
Enclosure	15 mm birch plywood
Finish	Textured polyurethane
Grille	Perforated steel with foam filter
Mounting	Yoke bracket positions Optional M20 top hat for pole mount

[1] Measured in half space [2] AES2 - 1984 compliant [3] Calculated

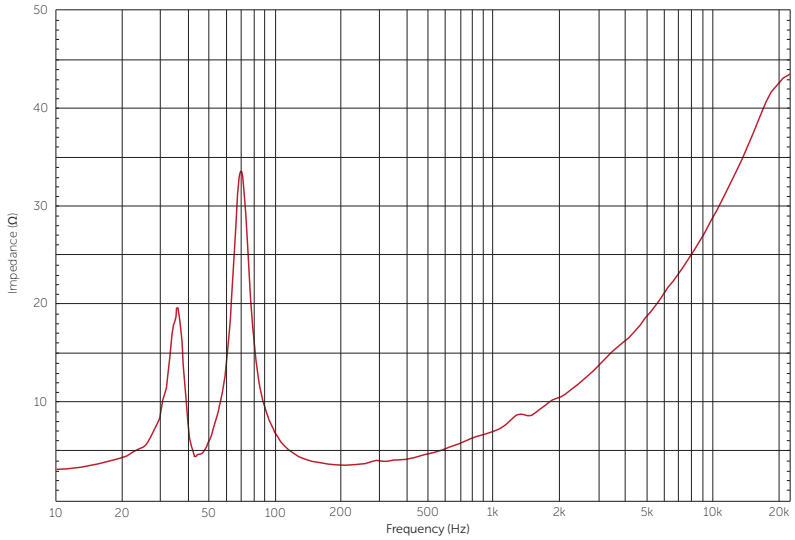

Figure A.12: Venu 212 V2 impedance graph

7 Appendix A: Specifications

A.7 Venu 115 V2 specifications

Frequency response	38 Hz - 160 Hz ±3 dB
Efficiency[1]	97 dB 1W/1m
Nominal impedance	8 Ω
Power handling[2]	500 W AES
Maximum output[3]	123 dB cont, 129 dB peak
Driver configuration	1 x 15" LF
Connectors	1 x Phoenix with link out 1 x speakON™ with link out
Height	446 mm (17.6")
Width	448 mm (17.6")
Depth	636 mm (25")
Weight	35 kg (77.2 lbs)
Enclosure	15 mm birch plywood
Finish	Textured polyurethane
Grille	Perforated steel with foam filter
Mounting	Yoke bracket positions 4 x M8 bolts for type 75 plate Optional M20 top hat for pole mount

[1] Measured in half space [2] AES2 - 1984 compliant [3] Calculated

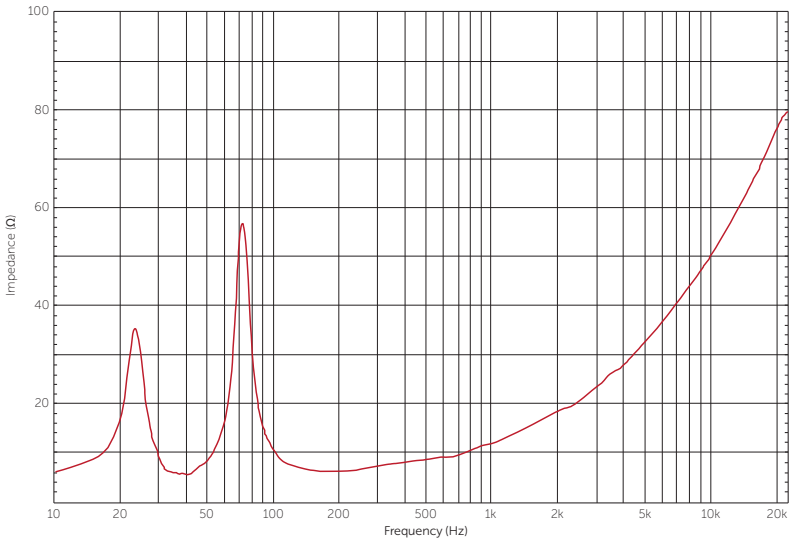

Figure A.13: Venu 115 V2 impedance graph

7 Appendix A: Specifications

A.8 Venu 215 V2 specifications

Frequency response	38 Hz - 160 Hz ±3 dB
Efficiency[1]	99 dB 1W/1m
Nominal impedance	4 Ω
Power handling[2]	1000 W AES
Maximum output[3]	130 dB cont, 136 dB peak
Driver configuration	2 x 15" LF
Connectors	1 x Phoenix with link out 1 x speakON™ with link out
Height	446 mm (17.6")
Width	860 mm (33.9")
Depth	636 mm (25")
Weight	62.5 kg (137.8 lbs)
Enclosure	15 mm birch plywood
Finish	Textured polyurethane
Grille	Perforated steel with foam filter
Mounting	Optional M20 top hat for pole mount

[1] Measured in half space [2] AES2 - 1984 compliant [3] Calculated

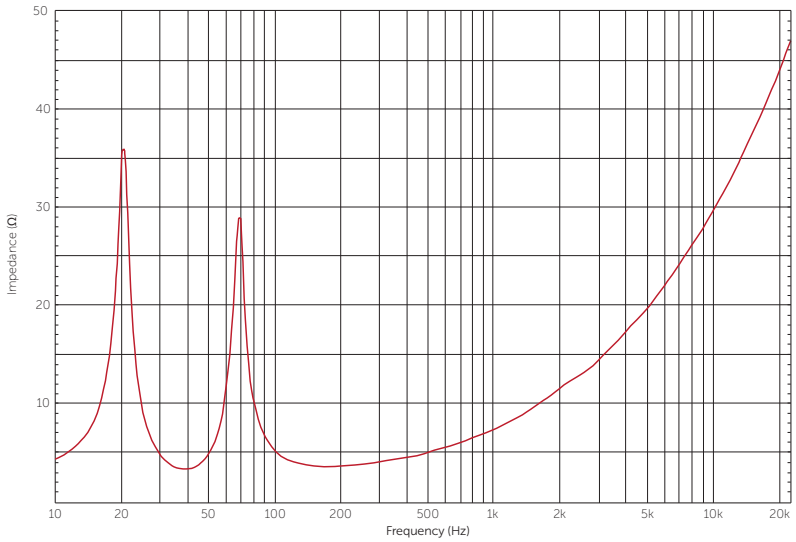

Figure C.4: Venu 215 impedance graph

7 Appendix A: Specifications

A.9 Venu 208 V2 specifications

Frequency response	42 Hz - 120 Hz ±3 dB
Efficiency[1]	95 dB 1W/1m
Nominal impedance	8 Ω
Power handling[2]	300 W AES
Maximum output[3]	125 dB
Driver configuration	2 x 8" LF
Connectors	1 x Phoenix with link out 1 x speakON™ with link out
Height	203 mm (8")
Width	600 mm (23.6")
Depth	475 mm (18.7")
Weight	20 kg (44.1 lbs)
Enclosure	15 mm birch plywood
Finish	Textured polyurethane
Grille	Perforated steel with foam filter
Mounting	Yoke bracket and type 75 plate positions

[1] Measured in half space [2] AES2 - 1984 compliant [3] Calculated

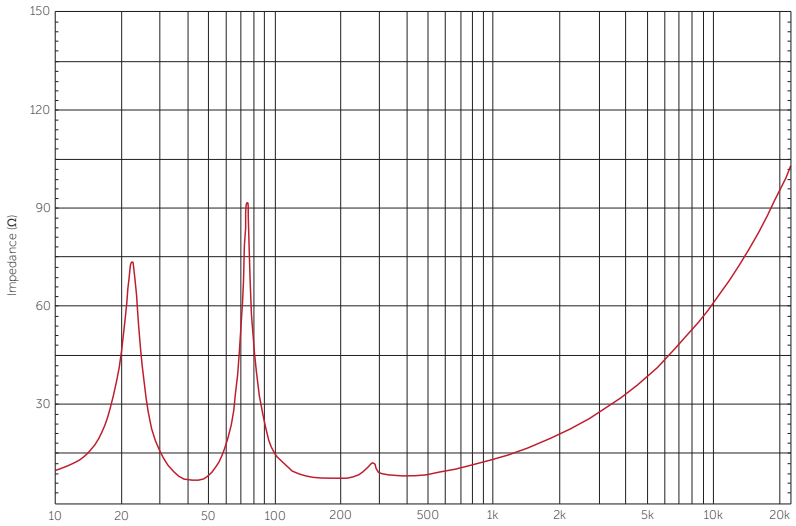

Figure C.5: Venu 208 impedance graph

8 Appendix B: Dimensions

B.2 Venu 8 V2 dimensions

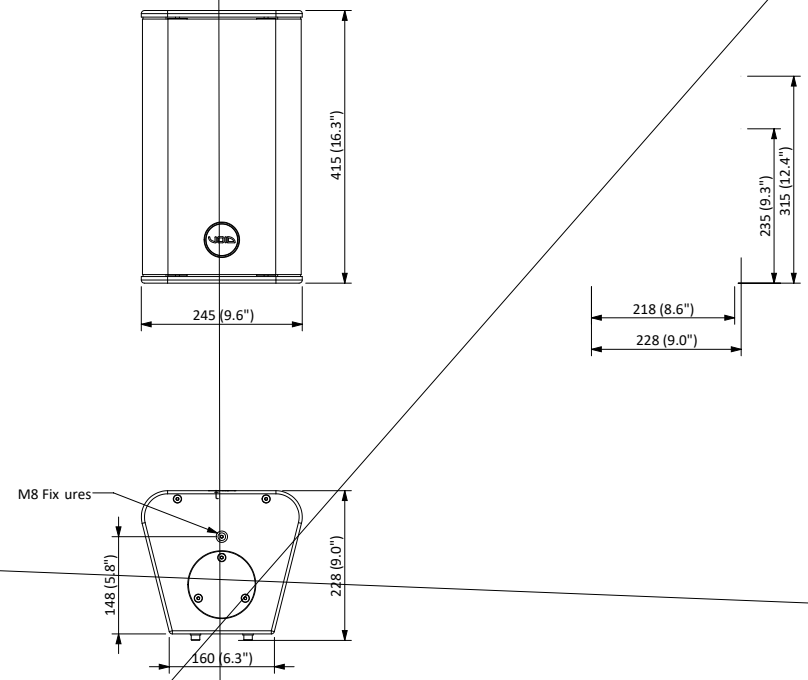

8 Appendix B: Dimensions

B.3 Venu 10 V2 dimensions

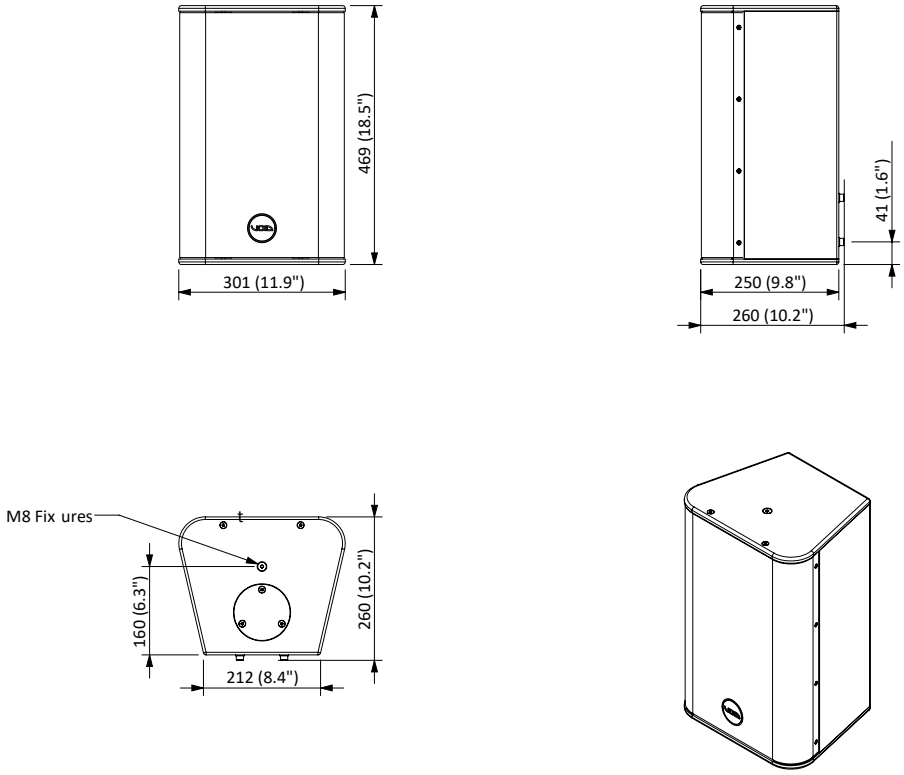

Figure B.3: Venu 10 V2 dimensions

B.4 Venu 12 V2 dimensions

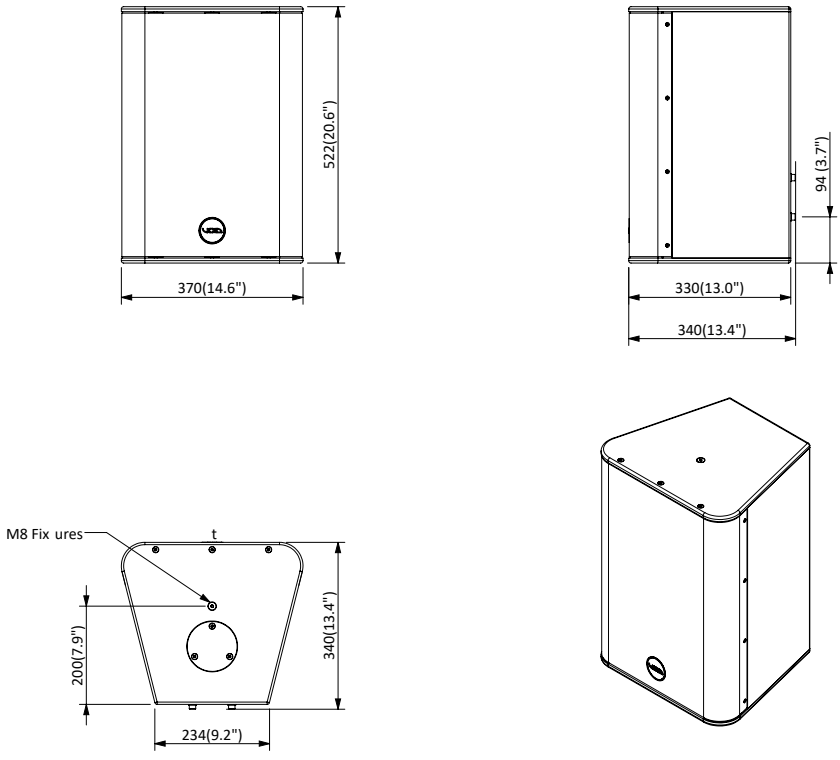

Figure B.4: Venu 12 V2 dimensions

8 Appendix B: Dimensions

B.5 Venu 15 V2 dimensions

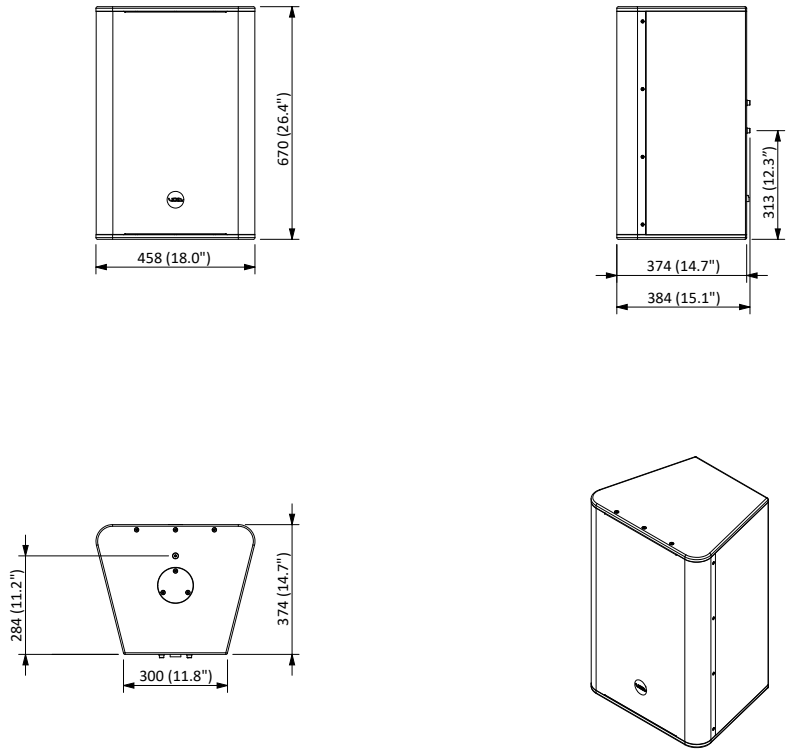

Figure B.5: Venu 15 V2 dimensions

B.6 Venu 112 V2 dimensions

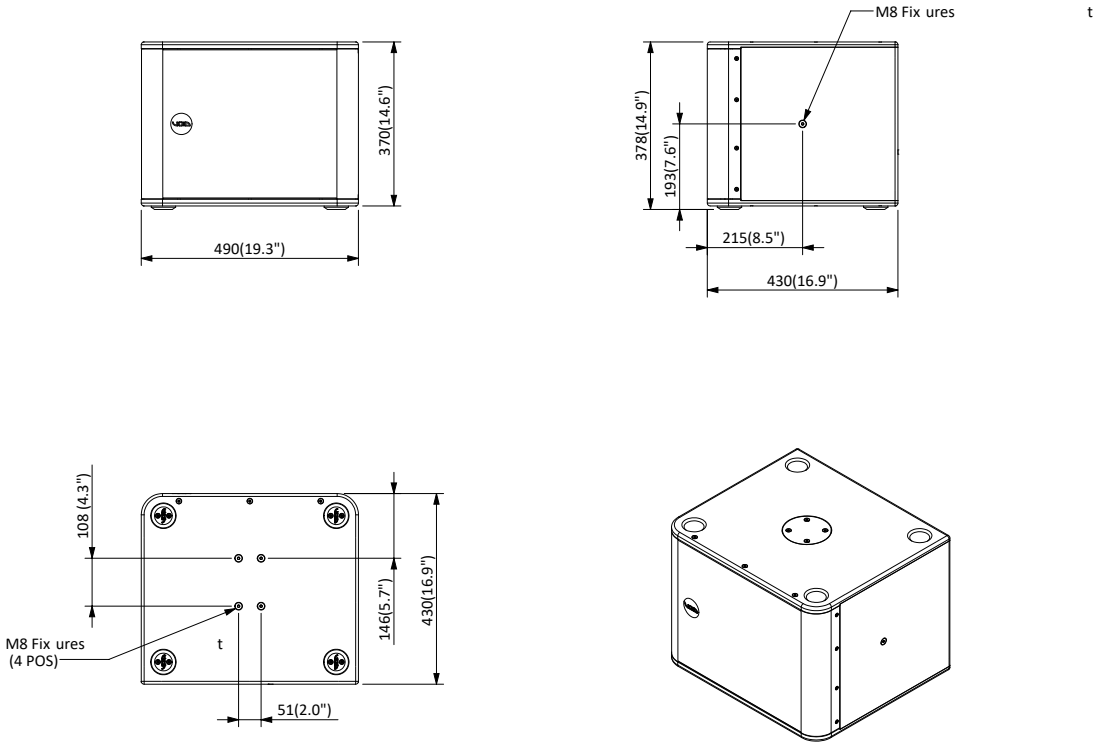

Figure B.6: Venu 112 V2 dimensions

8 Appendix B: Dimensions

B.7 Venu 212 V2 dimensions

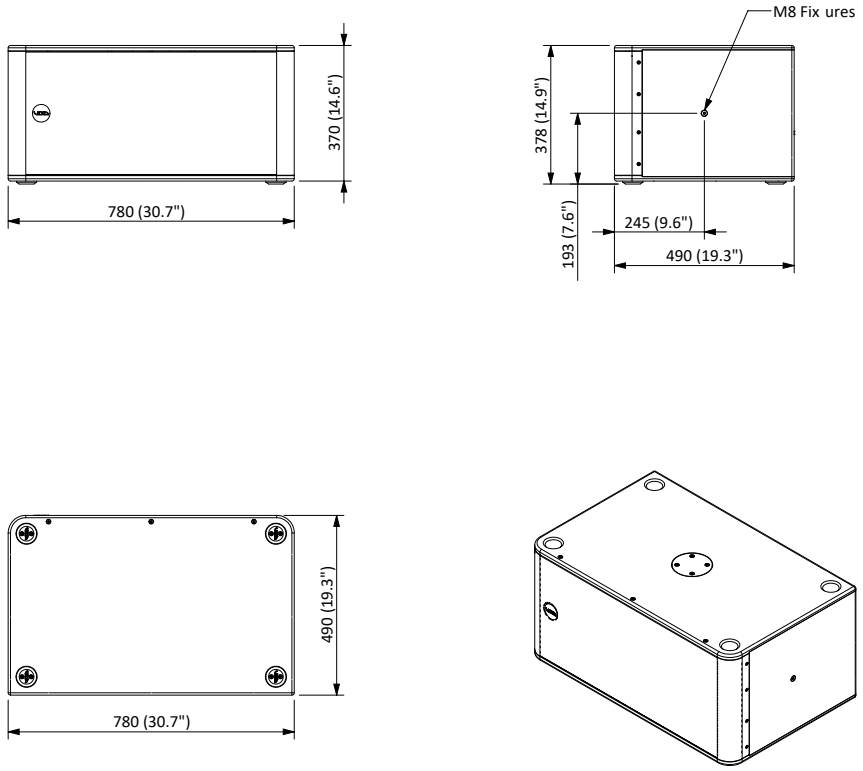

Figure B.7: Venu 212 V2 dimensions

B.8 Venu 115 V2 dimensions

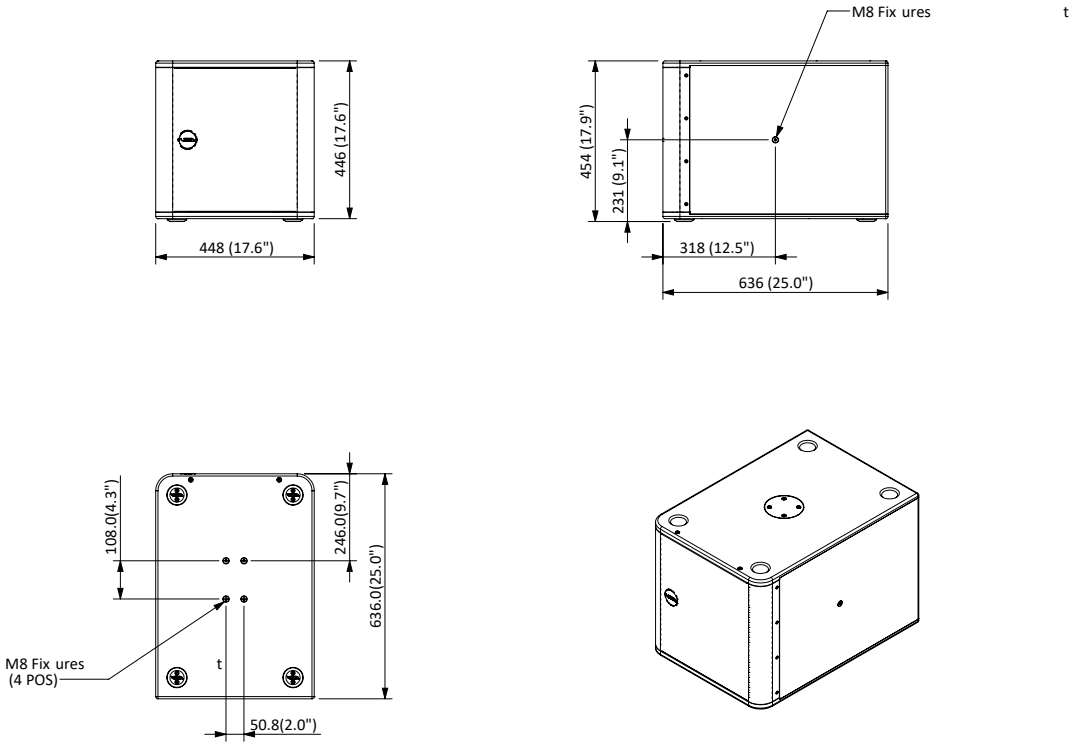

Figure B.8: Venu 115 V2 dimensions

8 Appendix B: Dimensions

B.9 Venu 215 V2 dimensions

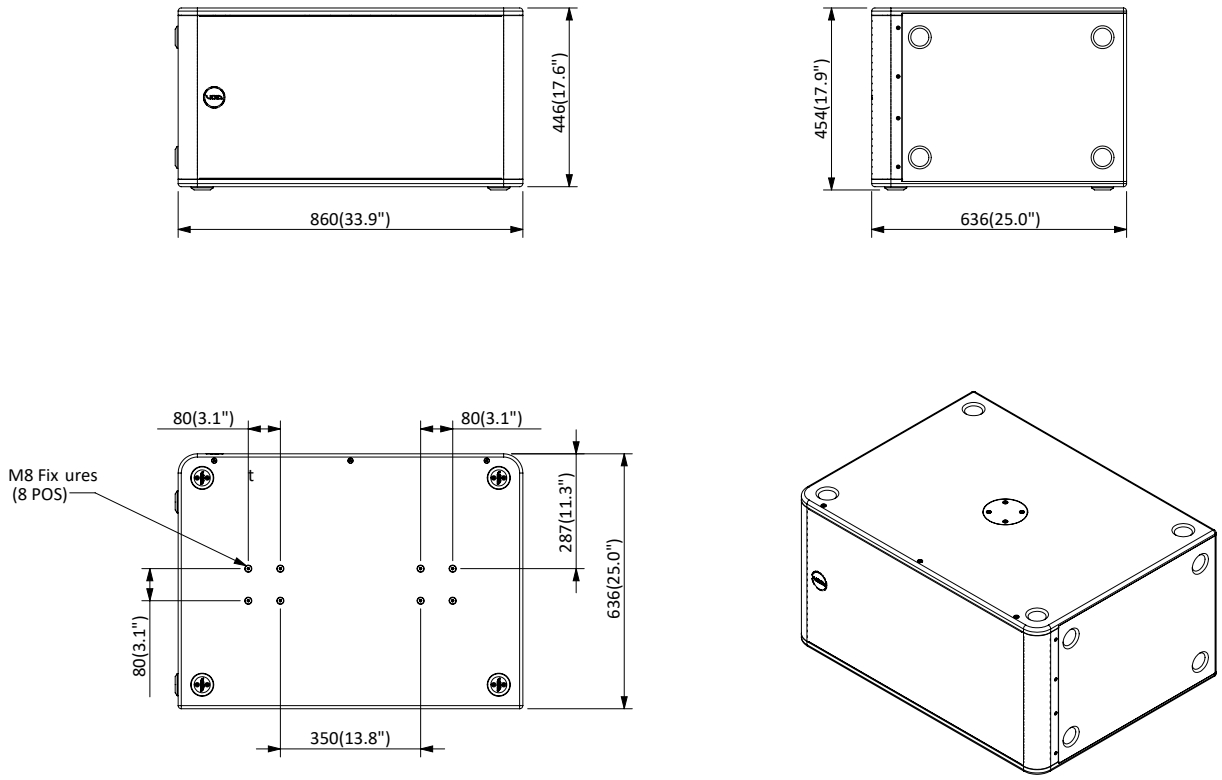

Figure B.9: Venu 215 V2 dimensions

B.9 Venu 208 V2 dimensions

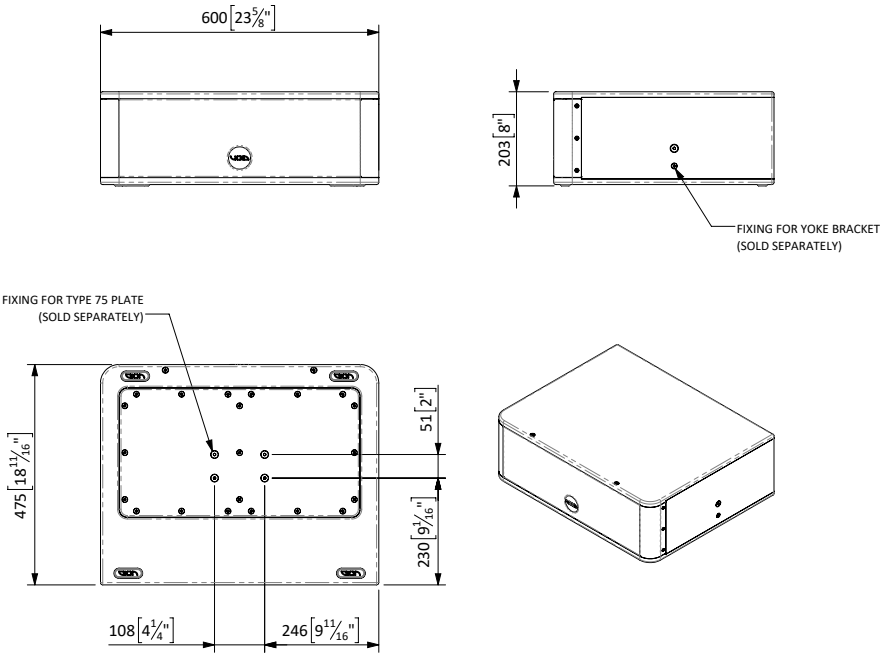

Figure B.10: Venu 208 V2 dimensions

9 Appendix C: Architectural Specifications

Venu 6 V2 architectural specifications

The loudspeaker shall be a passive two-way system consisting of one high power 6.5" (165 mm), direct radiating, reflex loaded, low frequency (LF) transducer and 1" (25 mm) diameter composite plastic exit, high frequency (HF) compression driver mounted on a user rotatable elliptic horn in a trapezoidal enclosure fitted with a wrap around grille and rotatable badge.

Power handling shall be 200 W AES at a nominal impedance of 8 Ω. Crossover point shall be at 2.4 kHz using a 3rd order filter (18 dB per octave). The wiring connection shall be as follows: a removable, lockable wiring connector with four screw-down terminals (one pair for input and one pair for link through to another loudspeaker) to provide secure wiring and allow for pre-wiring of the connector before the installation (this connector should then screw lock to the enclosure for secure attachment). In addition, a Neutrik speakON™ NL4 shall also feature.

Performance specifications for a typical production unit shall be as follows: the usable on-axis bandwidth shall be 75 Hz to 19 kHz (±3 dB) and shall average 90° directivity pattern on the horizontal axis and 60° on the vertical one (-6 dB down from on-axis level) from 1 kHz to 12 kHz; and a maximum SPL of 121 dB peak measured at 1 m using IEC268-5 pink noise.

The high frequency transducer shall project it's sound through an elliptic horn with a 152 mm (6") baffle diameter to achieve pattern control and low distortion. The low frequency transducer shall be constructed on a cast aluminium frame, with a treated paper cone, 38.1 mm (1.5") voice coil, wound with copper wires on a high quality Kapton voice coil former, for high power handling and long-term reliability.

The enclosure shall be of a trapezoidal shape constructed from a 15 mm multi-laminate birch plywood, with a textured polyurethane finish and shall include integral threaded inserts for the fitment of wall and ceiling mounting hardware as well as removable cover plate for fixing an optional M20 top-hat. External dimensions of (W) 224 mm x (H) 372 mm x (D) 202 mm (8.8" x 14.6" x 7.9"). Weight shall be 9.5 kg (20.9 lbs).

The loudspeaker shall be the Void Acoustics Venu 6 V2.

9 Appendix C: Architectural Specifications

Venu 8 V2 architectural specifications

The loudspeaker shall be a passive two-way system consisting of one high power 8" (203.2 mm), direct radiating, reflex loaded, low frequency (LF) transducer and 1" (25 mm) diameter composite plastic exit, high frequency (HF) compression driver mounted on a user rotatable asymmetrical horn in a trapezoidal enclosure fitted with a wraparound grille and rotatable badge.

Power handling shall be 300 W AES at a nominal impedance of 8 Ω. Crossover point shall be at 2.3 kHz using a 3rd order filter (18 dB per octave). The wiring connection shall be as follows: a removable, lockable wiring connector with four screw-down terminals (one pair for input and one pair for link through to another loudspeaker) to provide secure wiring and allow for pre-wiring of the connector before the installation (this connector should then screw lock to the enclosure for secure attachment). In addition, a Neutrik speakON™ NL4 shall also feature.

Performance specifications for a typical production unit shall be as follows: the usable on-axis bandwidth shall be 70 Hz to 20 kHz (±3 dB) and shall average 90° to 60° directivity pattern on the horizontal axis and 60° on the vertical one (-6 dB down from on-axis level) from 1 kHz to 12 kHz; and a maximum SPL of 124 dB peak measured at 1 m using IEC268-5 pink noise.

The high frequency transducer shall project it's sound through an asymmetrical horn with a 152 mm (6") baffle diameter to achieve pattern control and low distortion. The low frequency transducer shall be constructed on a cast aluminium frame, with a treated paper cone, 50.8 mm (2") voice coil, wound with copper wires on a high quality Kapton voice coil former, for high power handling and long-term reliability.

The enclosure shall be of a trapezoidal shape constructed from a 15 mm multi-laminate birch plywood, with a textured polyurethane finish and shall include integral threaded inserts for the fitment of wall and ceiling mounting hardware as well as removable cover plate for fixing an optional M20 top-hat. External dimensions of (W) 245 mm x (H) 415 mm x (D) 228 mm (9.6" x 16.3" x 9"). Weight shall be 12 kg (26.5 lbs).

The loudspeaker shall be the Void Acoustics Venu 8 V2.

9 Appendix C: Architectural Specifications

Venu 10 V2 architectural specifications

The loudspeaker shall be a passive two-way system consisting of one high power 10" (250 mm), direct radiating, reflex loaded, low frequency (LF) transducer and 1" (25 mm) diameter composite plastic exit, high frequency (HF) compression driver mounted on a user rotatable asymmetrical horn in a trapezoidal enclosure fitted with a wraparound grille and rotatable badge.

Power handling shall be 350 W AES at a nominal impedance of 8 Ω. Crossover point shall be at 2.1 kHz using a 3rd order filter (18 dB per octave). The wiring connection shall be as follows: a removable, lockable wiring connector with four screw-down terminals (one pair for input and one pair for link through to another loudspeaker) to provide secure wiring and allow for pre-wiring of the connector before the installation (this connector should then screw lock to the enclosure for secure attachment). In addition, a Neutrik speakON™ NL4 shall also feature.

Performance specifications for a typical production unit shall be as follows: the usable on-axis bandwidth shall be 65 Hz to 20 kHz (±3 dB) and shall average 90° to 60° directivity pattern on the horizontal axis and 60° on the vertical one (-6 dB down from on-axis level) from 1 kHz to 12 kHz; and a maximum SPL of 126 dB peak measured at 1 m using IEC268-5 pink noise.

The high frequency transducer shall project it's sound through an asymmetrical horn with a 152 mm (6") baffle diameter to achieve pattern control and low distortion. The low frequency transducer shall be constructed on a cast aluminium frame, with a treated paper cone, 50.8 mm (2") voice coil, wound with copper wires on a high quality Kapton voice coil former, for high power handling and long-term reliability.

The enclosure shall be of a trapezoidal shape constructed from a 15 mm multi-laminate birch plywood, with a textured polyurethane finish and shall include integral threaded inserts for the fitment of wall and ceiling mounting hardware as well as removable cover plate for fixing an optional M20 top-hat. External dimensions of (W) 301 mm x (H) 469 mm x (D) 260 mm (11.9" x 18.5" x 10.2"). Weight shall be 16 kg (35.3 lbs).

The loudspeaker shall be the Void Acoustics Venu 10 V2.

9 Appendix C: Architectural Specifications

Venu 12 V2 architectural specifications

The loudspeaker shall be a passive two-way system consisting of one high power 12" (304.8 mm), direct radiating, reflex loaded, low frequency (LF) transducer and 1" (25 mm) diameter composite plastic exit, high frequency (HF) compression driver mounted on a user rotatable asymmetrical horn in a trapezoidal enclosure fitted with a wrap around grille and rotatable badge.

Power handling shall be 400 W AES at a nominal impedance of 8 Ω. Crossover point shall be at 2.1 kHz using a 3rd order filter (18 dB per octave). The wiring connection shall be as follows: a removable, lockable wiring connector with four screw-down terminals (one pair for input and one pair for link through to another loudspeaker) to provide secure wiring and allow for pre-wiring of the connector before the installation (this connector should then screw lock to the enclosure for secure attachment). In addition, a Neutrik speakON™ NL4 shall also feature.

Performance specifications for a typical production unit shall be as follows: the usable on-axis bandwidth shall be 60 Hz to 20 kHz (±3 dB) and shall average 90° to 60° directivity pattern on the horizontal axis and 60° on the vertical one (-6 dB down from on-axis level) from 1 kHz to 12 kHz; and a maximum SPL of 127 dB peak measured at 1 m using IEC268-5 pink noise.

The high frequency transducer shall project it's sound through an asymmetrical horn with a 152 mm (6") baffle diameter to achieve pattern control and low distortion. The low frequency transducer shall be constructed on a cast aluminium frame, with a treated paper cone, 50.8 mm (2") voice coil, wound with copper wires on a high quality Kapton voice coil former, for high power handling and long-term reliability.

The enclosure shall be of a trapezoidal shape constructed from a 15 mm multi-laminate birch plywood, with a textured polyurethane finish and shall include integral threaded inserts for the fitment of wall and ceiling mounting hardware as well as removable cover plate for fixing an optional M20 top-hat. External dimensions of (W) 370 mm x (H) 522 mm x (D) 340 mm (14.6" x 20.6" x 13.4"). Weight shall be 22 kg (48.5 lbs).

The loudspeaker shall be the Void Acoustics Venu 12 V2.

9 Appendix C: Architectural Specifications

Venu 15 V2 architectural specifications

The loudspeaker shall be a passive two-way system consisting of one high power 15" (381 mm), direct radiating, reflex loaded, low frequency (LF) transducer and 1" (25 mm) diameter composite plastic exit, high frequency (HF) compression driver mounted on a user rotatable asymmetrical horn in a trapezoidal enclosure fitted with a wraparound grille and rotatable badge.

Power handling shall be 450 W AES at a nominal impedance of 8 Ω. Crossover point shall be at 2.1 kHz using a 3rd order filter (18 dB per octave). The wiring connection shall be as follows: a removable, lockable wiring connector with four screw-down terminals (one pair for input and one pair for link through to another loudspeaker) to provide secure wiring and allow for pre-wiring of the connector before the installation (this connector should then screw lock to the enclosure for secure attachment). In addition, a Neutrik speakON™ NL4 shall also feature.

Performance specifications for a typical production unit shall be as follows: the usable on-axis bandwidth shall be 50 Hz to 20 kHz (±3 dB) and shall average 90° to 60° directivity pattern on the horizontal axis and 60° on the vertical one (-6 dB down from on-axis level) from 1 kHz to 12 kHz; and a maximum SPL of 128 dB peak measured at 1 m using IEC268-5 pink noise.

The high frequency transducer shall project it's sound through an asymmetrical horn with a 152 mm (6") baffle diameter to achieve pattern control and low distortion. The low frequency transducer shall be constructed on a cast aluminium frame, with a treated paper cone, 75.5 mm (3") voice coil, wound with copper wires on a high quality Kapton voice coil former, for high power handling and long-term reliability.

The enclosure shall be of a trapezoidal shape constructed from a 15 mm multi-laminate birch plywood, with a textured polyurethane finish and shall include integral threaded inserts for the fitment of wall and ceiling mounting hardware as well as removable cover plate for fixing an optional M20 top-hat. External dimensions of (W) 458 mm x (H) 670 mm x (D) 381 mm (18" x 26.4" x 15"). Weight shall be 31 kg (68.3 lbs).

The loudspeaker shall be the Void Acoustics Venu 15 V2.

9 Appendix C: Architectural Specifications

Venu 112 V2 architectural specifications

The loudspeaker shall be comprised of one high power 12" (304.8 mm) direct radiating, reflex loaded low frequency (LF) transducer. The enclosure shall be rectangular constructed from 15 mm multi-laminated birch plywood with a single handle in the rear with a wraparound grille and a rotating badge; it shall have a removable cover plate for fixing an optional M20 top hat and integral threaded inserts for the fitment of wall and ceiling mounting hardware; it shall be finished in a textured polyurethane with external dimensions of (H) 378 mm x (W) 490 mm x (D) 430 mm (14.9" x 19.3" x 16.9") and weigh 27 kg (59.5 lbs).

The wiring connection shall be as follows: a removable, lockable wiring connector with four screw-down terminals (one pair for input and one pair for link through to another loudspeaker) to provide secure wiring and allow for pre-wiring of the connector before the installation (this connector should then screw lock to the enclosure for secure attachment). In addition, a Neutrik speakON™ NL4 shall also feature.

Performance specifications of a typical production unit shall be as follows: frequency response of 40 Hz – 160 Hz ($\pm$3 dB from rated sensitivity); 600 W long-term program per voice coil using EIA RS-426A pink noise (6 dB crest factor); pressure sensitivity of 96 dB at one Watt at one metre; rated nominal impedance of 8 Ω.

The low frequency transducer shall be constructed on a cast aluminium frame with a treated paper cone, 101.6 mm (4") voice, wound with copper wire on a high-quality voice coil former for high power handling and long-term reliability.

The loudspeaker system shall be a Void Acoustics Venu 112 V2.

9 Appendix C: Architectural Specifications

Venu 212 V2 architectural specifications

The loudspeaker shall be comprised of two high power 12" (304.8 mm) direct radiating, reflex loaded low frequency (LF) transducers.

The enclosure shall be rectangular constructed from 15 mm multi-laminated birch plywood with two handles in the rear with a wraparound grille and a rotating badge; it shall have a removable cover plate for fixing an optional M20 top hat and integral threaded inserts for the fitment of wall and ceiling mounting hardware; it shall be finished in a textured polyurethane with external dimensions of (H) 370 mm x (W) 780 mm x (D) 490 mm (14.6" x 30.7" x 19.3") and weigh 47.5 kg (104.7 lbs).

The wiring connection shall be as follows: a removable, lockable wiring connector with four screw-down terminals (one pair for input and one pair for link through to another loudspeaker) to provide secure wiring and allow for pre-wiring of the connector before the installation (this connector should then screw lock to the enclosure for secure attachment). In addition, a Neutrik speakON™ NL4 shall also feature.

Performance specifications of a typical production unit shall be as follows: frequency response of 34 Hz – 160 Hz (±3 dB from rated sensitivity); 1200 W long-term program per voice coil using EIA RS-426A pink noise (6 dB crest factor); pressure sensitivity of 99 dB at one Watt at one metre; rated nominal impedance of 4 Ω.

The low frequency transducer shall be constructed on a cast aluminium frame with a treated paper cone, 101.6 mm (4") voice, wound with copper wire on a high-quality voice coil former for high power handling and long-term reliability.

The loudspeaker system shall be a Void Acoustics Venu 212 V2.

9 Appendix C: Architectural Specifications

Venu 115 V2 architectural specifications

The loudspeaker shall be comprised of one high power 15" (304.8 mm) direct radiating, reflex loaded low frequency (LF) transducer. The enclosure shall be rectangular constructed from 18 mm multi-laminated birch plywood with a single handle in the rear with a wraparound grille and a rotating badge; it shall have a removable cover plate for fixing an optional M20 top hat and integral threaded inserts for the fitment of wall and ceiling mounting hardware; it shall be finished in a textured polyurethane with external dimensions of (H) 454 mm x (W) 448 mm x (D) 636 mm (17.9" x 17.6" x 25") and weigh 31 kg (98.1 lbs).

The wiring connection shall be as follows: a removable, lockable wiring connector with four screw-down terminals (one pair for input and one pair for link through to another loudspeaker) to provide secure wiring and allow for pre-wiring of the connector before the installation (this connector should then screw lock to the enclosure for secure attachment). In addition, a Neutrik speakON™ NL4 shall also feature.

Performance specifications of a typical production unit shall be as follows: frequency response of 38 Hz – 160 Hz (±3 dB from rated sensitivity); 500 W long-term program per voice coil using EIA RS-426A pink noise (6 dB crest factor); pressure sensitivity of 96 dB at one Watt at one metre; rated nominal impedance of 8 Ω.

The low frequency transducer shall be constructed on a cast aluminium frame with a treated paper cone, 101.6 mm (4") voice, wound with copper wire on a high-quality voice coil former for high power handling and long-term reliability.

The loudspeaker system shall be a Void Acoustics Venu 115 V2.

9 Appendix C: Architectural Specifications

Venu 215 V2 architectural specifications

The loudspeaker shall be active comprised of two high power 15" (304.8 mm) direct radiating, reflex loaded low frequency (LF) transducers. The enclosure shall be rectangular constructed from 15 mm multi-laminated birch plywood with two handles in the rear with a wraparound grille and a rotating badge; it shall have a removable cover plate for fixing an optional M20 top hat and shall be finished in a textured polyurethane with external dimensions of (H) 454 mm x (W) 868 mm x (D) 636 mm (17.9" x 34.2" x 25") and weigh 57 kg (125.7 lbs).

Performance specifications of a typical production unit shall be as follows: frequency response of 38 Hz – 160 Hz ($\pm$3 dB from rated sensitivity); 1000 W long-term program per voice coil using EIA RS-426A pink noise (6 dB crest factor); pressure sensitivity of 99 dB at one Watt at one metre; rated nominal impedance of 4 Ω.

The low frequency transducer shall be constructed on a cast aluminium frame with a treated paper cone, 101.6 mm (4") voice, wound with copper wire on a high-quality voice coil former for high power handling and long-term reliability.

The wiring connection shall be as follows: a removable, lockable wiring connector with four screw-down terminals (one pair for input and one pair for link through to another loudspeaker) to provide secure wiring and allow for pre-wiring of the connector before the installation (this connector should then screw lock to the enclosure for secure attachment). In addition, a Neutrik speakON™ NL4 shall also feature.

The loudspeaker system shall be a Void Acoustics Venu 215 V2.

9 Appendix C: Architectural Specifications

Venu 208 architectural specifications

The loudspeaker shall be comprised of two high power 8" (203.2 mm) low frequency (LF) transducers.

The enclosure shall be rectangular constructed from 15 mm multi-laminated birch plywood with a wraparound grille and a rotating badge; it shall have integral threaded inserts for the fitment of wall and ceiling mounting hardware; it shall be finished in a textured polyurethane with external dimensions of (H) 203 mm x (W) 600 mm x (D) 475 mm (8" x 23.6" x 18.7") and weigh 20 kg (44 lbs).

The wiring connection shall be as follows: a removable, lockable wiring connector with four screw-down terminals (one pair for input and one pair for link through to another loudspeaker) to provide secure wiring and allow for pre-wiring of the connector before the installation (this connector should then screw lock to the enclosure for secure attachment). In addition, a Neutrik speakON™ NL4 shall also feature.

Performance specifications of a typical production unit shall be as follows: frequency response of 42 Hz – 120 Hz ($\pm$3 dB from rated sensitivity); 300 W long-term program per voice coil using IEC268-5 pink noise (6 dB crest factor); pressure sensitivity of 95 dB at one Watt at one metre; rated nominal impedance of 8 Ω.

The low frequency transducer shall be constructed on a cast aluminium frame with a treated paper cone, 50.8 mm (2") voice coil, wound with copper wire on a high-quality voice coil former for high power handling and long-term reliability.

The loudspeaker system shall be a Void Acoustics Venu 208 V2.

10 Appendix D: Bracket Matrix

	T80		T80XL		Yoke Bracket		T80 Ceiling Mount		Venu V2 Top Hat		T75 Wall Bracket		Heavy Duty Top Hat		T75 Ceiling Bracket	
	White	Black	White	Black	White	Black	White	Black	White	Black	White	Black	White	Black	White	Black
Venu 6	IT1109	IT1107					IT1106	IT1105	IT3474	IT3473						
Venu 8	IT1109	IT1107			IT3099	IT1131	IT1106	IT1105	IT3474	IT3473						
Venu 10			IT1115	IT1114	IT2300	IT1129	IT1106	IT1105	IT3474	IT3473						
Venu 12			IT1115	IT1114	IT2023	IT1130	IT1106	IT1105	IT3474	IT3473						
Venu 15			IT1115	IT1114	IT2942	IT2941	IT1106	IT1105	IT3474	IT3473						
Venu 112			IT1115	IT1114	IT2921	IT2920					IT1133	IT1132	IT2042	IT2041	IT1905	IT1140
Venu 212					IT2924	IT2923							IT2042	IT2041		
Venu 115					IT2925	IT2926					IT1133	IT1132	IT2042	IT2041	IT1905	IT1140
Venu 215													IT2042	IT2041		
Venu 208					IT3216	IT3215					IT1133	IT1132			IT1905	IT1140

NORTH AMERICA

Void Acoustics North America

Call: +1 503 854 7134
Email: sales.usa@voidacoustics.com

HEAD OFFICE

Void Acoustics Research Ltd,
Unit 15, Dawkins Road Industrial Estate,
Poole, Dorset,
BH15 4JY
United Kingdom

Call: +44(0) 1202 666006
Email: info@voidacoustics.com

VOID

Hear. Feel. Connect.

voidacoustics.com

Void Acoustics Research Limited is a company registered in England and Wales registration number 07533536