INTIMIDATOR TRIO XD

User Manual

CHAUVET DJ

Edition Notes

The Intimidator Trio XD User Manual includes a description, safety precautions, installation, programming, operation, and maintenance instructions for the Intimidator Trio XD as of the release date of this edition.

Trademarks

Chauvet, Chauvet DJ, the Chauvet logo, and Intimidator are registered trademarks or trademarks of Chauvet & Sons, LLC (d/b/a Chauvet and Chauvet Lighting) in the United States and other countries. Other company and product names and logos referred to herein may be trademarks of their respective companies.

Copyright Notice

The works of authorship contained in this manual, including, but not limited to, all designs, text, and images are owned by Chauvet.

© Copyright 2026 Chauvet & Sons, LLC. All rights reserved.

Electronically published by Chauvet in the United States of America.

Manual Use

Chauvet authorizes its customers to download and print this manual for professional information purposes only. Chauvet expressly prohibits the usage, copy, storage, distribution, modification, or printing of this manual or its content for any other purpose without written consent from Chauvet.

Document Printing

For best results, print this document in color, on letter size paper (8.5 x 11 in), double-sided. If using A4 paper (210 x 297 mm), configure the printer to scale the content accordingly.

Intended Audience

Any person installing, operating, and/or maintaining this product should completely read through the guide that shipped with the product, as well as this manual, before installing, operating, or maintaining this product.

Disclaimer

Chauvet believes that the information contained in this manual is accurate in all respects. However, Chauvet assumes no responsibility and specifically disclaims any and all liability to any party for any loss, damage, or disruption caused by any errors or omissions in this document, whether such errors or omissions result from negligence, accident, or any other cause. Chauvet reserves the right to revise the content of this document without any obligation to notify any person or company of such revision; however, Chauvet has no obligation to make, and does not commit to make, any such revisions.

Document Revision

Go to www.chauvetdj.com for the latest version.

Revision	Date	Description
4	10/2026	Updated Illuminance data in Tech Specs. section.

TABLE OF CONTENTS

1. Before You Begin 1
- What Is Included 1
- Unpacking Instructions 1
- Claims 1
- Text Conventions 1
- Symbols 1
- Safety Notes 2
- FCC Statement of Compliance 3
- RF Exposure Warning for North America and Australia 3

2. Introduction 4
- Product Overview 4
- Product Dimensions 5

3. Setup 6
- AC Power 6
  - Fuse Replacement 6
  - Power Linking 7
- Mounting 8
  - Orientation 8
  - Rigging 8

4. Operation 9
- Control Panel Operation 9
- Menu Map 9
- DMX Configuration 12
  - Personality and Starting Address 12
  - Starting Address 12
  - DMX Personalities 12
- DMX Channel Assignments and Values 13
  - Control Chart 13
  - Strobe Chart 14
  - Color Macros 14
  - Pattern Values 14
  - LED Macro Chart 15
  - DMX Charts 16
- Standalone Configuration 18
  - Automatic Program 18
  - Sound-Active Mode 18
  - Manual Mode 19
- Settings Configuration 19
  - Pan Reverse 19
  - Tilt Reverse 20
  - Pan Angle 20
  - Tilt Angle 20
  - Totem Mode 20
  - Blackout on Movement 20
  - Display Timer 20
  - Screen Reverse 21
  - Dimmer Curve 21
  - Dimmer Speed 21
  - Sensitivity 21
  - DMX Loss 21
  - Indicator 21
  - Flash if DMX 22
  - Firmware Update 22
  - Reset 22

Factory Reset 22
System Information 22
Master/Slave Mode 23
D-Fi Master/Slave Mode 23
RFC Remote Control 24
RFC Remote Binding 24
RFC Control Options 24
RFC Remote Control Operation 25
RFC-XL Remote Control Operation 26
5. Maintenance 27
Product Maintenance 27
6. Technical Specifications 28
Contact Us 29
Warranty & Returns 29

1. Before You Begin

What Is Included

- Intimidator Trio XD
- Power cable
- PowerCON to bare end (EU only)
- Hanging brackets
- Quick Reference Guide

Unpacking Instructions

Carefully unpack the product immediately and check the container to make sure all the parts are in the package and are in good condition.

Claims

If the box or the contents (the product and included accessories) appear damaged from shipping, or show signs of mishandling, notify the carrier immediately, not Chauvet. Failure to report damage to the carrier immediately may invalidate a claim. In addition, keep the box and contents for inspection.

For other issues, such as missing components or parts, damage not related to shipping, or concealed damage, file a claim with Chauvet within 7 days of delivery.

Text Conventions

Convention	Meaning
1–512	A range of values
50/60	A set of values of which only one can be chosen
Settings	A menu option not to be modified
<ENTER>	A key to be pressed on the product's control panel
ON	A value to be entered or selected

Symbols

Symbol	Meaning
	Critical installation, configuration, or operation information. Not following these instructions may make the product not work, cause damage to the product, or cause harm to the operator.
	Important installation or configuration information. The product may not function correctly if this information is not used.
	Useful information.

Safety Notes

These Safety Notes include important information about installation, use, and maintenance of the Intimidator Trio XD.

- The luminaire is intended for professional use only.
- The luminaire should be positioned so that prolonged staring into the luminaire at a distance closer than 73.5 ft (22.4 m) is not expected.
- If the external flexible cable or cord of this luminaire is damaged, it shall be replaced by a special cord or cord exclusively available from the manufacturer or its service agent.
- The light source contained in this luminaire shall only be replaced by the manufacturer or its service agent or a similar qualified person.
- The minimum distance from irradiated object to the final lens of the luminaire is 1 m.
- The maximum exterior surface temperature is 70° C.

- **ALWAYS:**
  - Connect to a grounded circuit.
  - Connect to operating voltages as specified on the product's spec sticker.
  - Disconnect from power before replacing the fuse.
  - Disconnect from its power source during periods of inactivity.
  - Use a safety cable when suspending overhead.
  - Heed all restrictions and warnings on the spec sticker.
  - Mount in a location with at least 20 in (50 cm) of ventilation.
  - Replace the fuse with the same type and rating.
- In the event of a serious operating problem, stop using immediately.
- **DO NOT:**
  - Open this product or attempt any repairs. It contains no user-serviceable parts.
  - Look at the light source when the product is on.
  - Use if the power cable is crimped or damaged.
  - Disconnect by pulling on the power cable.
  - Leave any flammable material within 1 m of this product while operating or connected to power.
  - Touch the housing when it is on.
  - Block any ventilation holes/slots in the housing.
  - Connect to a dimmer or rheostat.
  - Carry the product by its power cable.
  - Operate in temperatures higher than 104°F (40°C).
  - Expose to environments that exceed the Ingress Protection (IP) rating.
  - Expose to rain or moisture.
  - Use outdoors.
  - Submerge.

Keep this User Manual for future use. If the product is sold to someone else, be sure that they also receive this document.

FCC Statement of Compliance

This device complies with Part 15 Part B of the FCC rules. Operation is subject to the following two conditions:

1. This device may not cause harmful interference, and
2. This device must accept any interference received, including interference that may cause undesired operation.

This equipment has been tested and found to comply with the limits for a Class B digital device, pursuant to Part 15 of the FCC Rules. These limits are designed to provide reasonable protection against harmful interference in a residential installation. This equipment generates uses and can radiate radio frequency energy and, if not installed and used in accordance with the instructions, may cause harmful interference to radio communications. However, there is no guarantee that interference will not occur in a particular installation. If this equipment does cause harmful interference to radio or television reception, which can be determined by turning the equipment off and on, the user is encouraged to try to correct the interference by one or more of the following measures:

- Reorient or relocate the receiving antenna.
- Increase the separation between the equipment and receiver.
- Connect the equipment into an outlet on a circuit different from that to which the receiver is connected.
- Consult the dealer or an experienced radio/TV technician for help.

Any changes or modifications not expressly approved by the party responsible for compliance could void the user's authority to operate the equipment.

RF Exposure Warning for North America and Australia

Warning! This equipment complies with FCC radiation exposure limits set forth for an uncontrolled environment. This equipment should be installed and operated with a minimum distance of 20 cm between the radiator and the user. This transmitter must not be co-located or operating in conjunction with any other antenna or transmitter.

2. Introduction

Product Overview

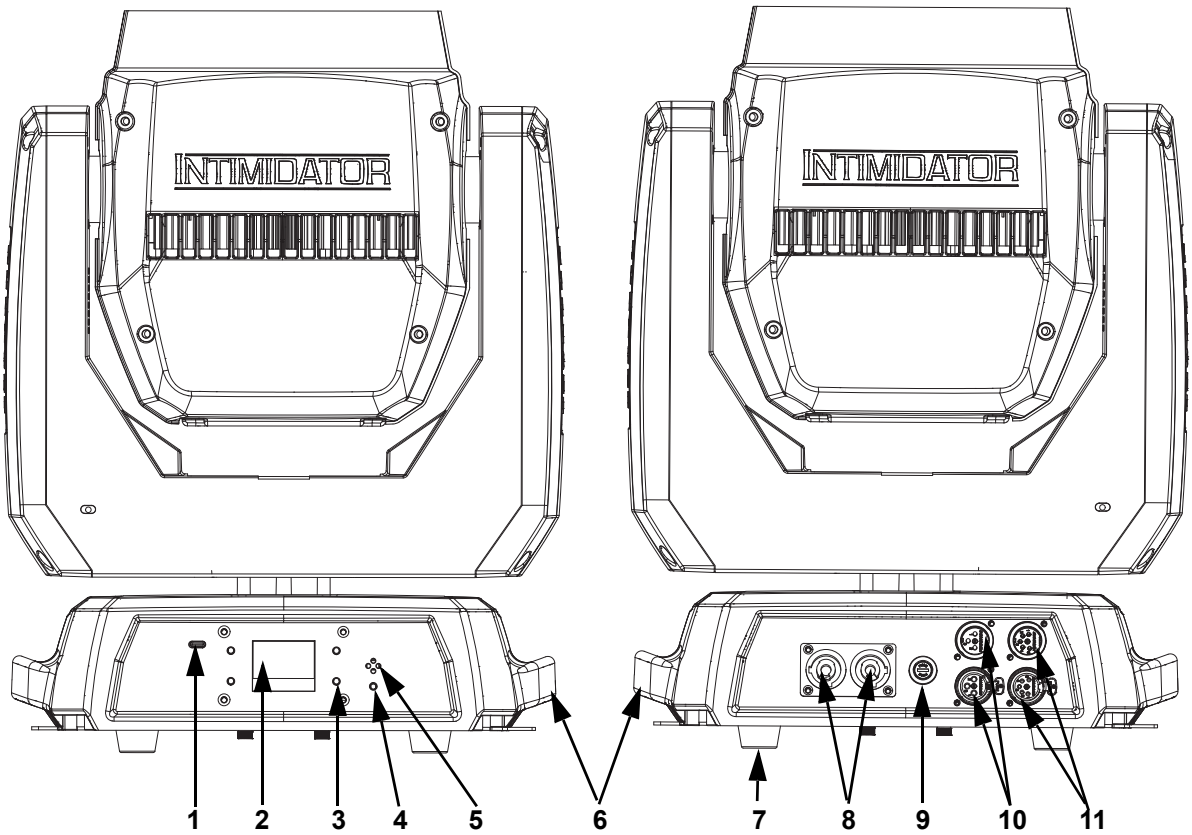

#	Name	#	Name
1	USB-C port	7	Rubber foot (x4)
2	LCD display	8	Power in/out
3	Menu buttons	9	Fuse holder
4	DFI indicator LED	10	3-pin in/out
5	Microphone	11	5-pin in/out
6	Carry handles (x2)		

Product Dimensions

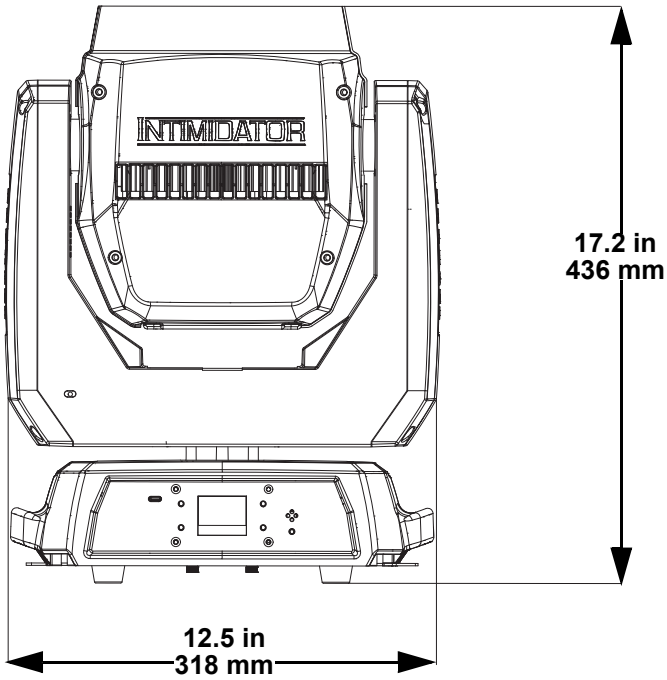

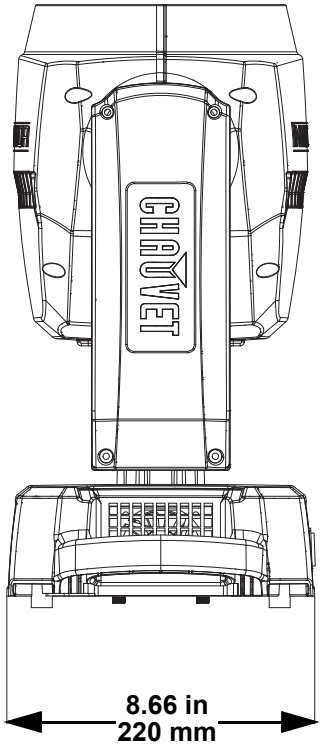

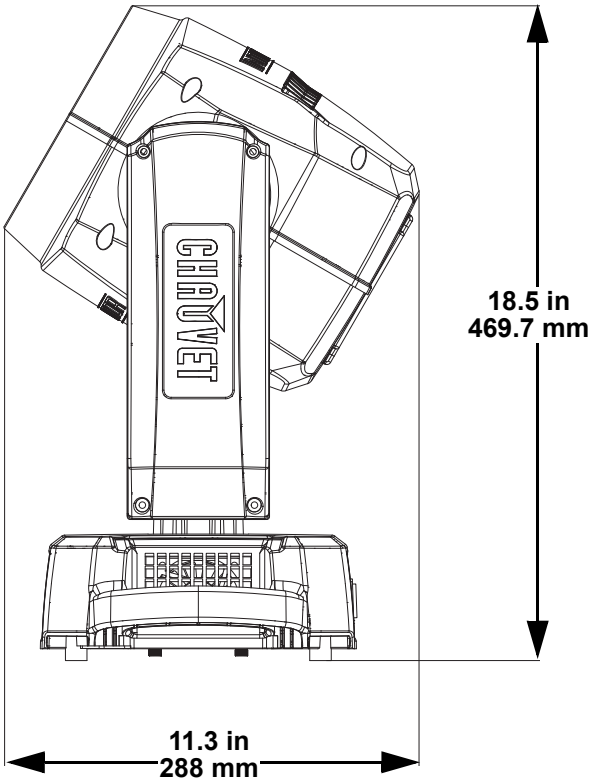

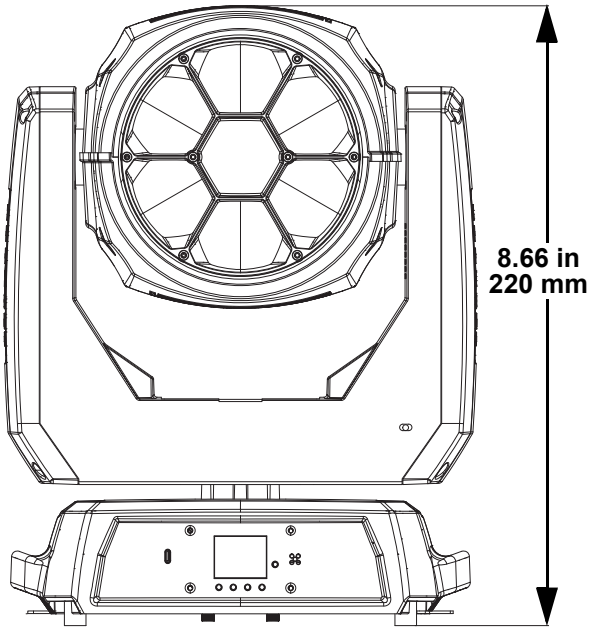

3. Setup

AC Power

The Intimidator Trio XD has an auto-ranging power supply and it can work with an input voltage range of 100 to 240 VAC, 50/60 Hz.

To determine the product's power requirements (circuit breaker, power outlet, and wiring), use the current value listed on the label affixed to the product's back panel, or refer to the product's specifications chart. The listed current rating indicates the product's average current draw under normal conditions.

- **Always connect the product to a protected circuit (a circuit breaker or fuse). Make sure the product has an appropriate electrical ground to avoid the risk of electrocution or fire.**
- **To eliminate unnecessary wear and improve its lifespan, during periods of non-use completely disconnect the product from power via breaker or by unplugging it.**

Never connect the product to a rheostat (variable resistor) or dimmer circuit, even if the rheostat or dimmer channel serves only as a 0 to 100% switch.

Fuse Replacement

1. Disconnect the product from power.
2. Using a Phillips-head screwdriver, unscrew the fuse holder and pull it straight out.
3. Remove the blown fuse from the holder and replace with a fuse of the exact same type and rating, F5A 250V.
4. Re-insert the fuse holder and reconnect power.

Disconnect the product from the power outlet before replacing the fuse.

Always replace a blown fuse with one of the same type and rating.

Power Linking

This product provides power linking via the outlet located in the back of the product. See the diagram below for further explanation.

Power Linking Diagram

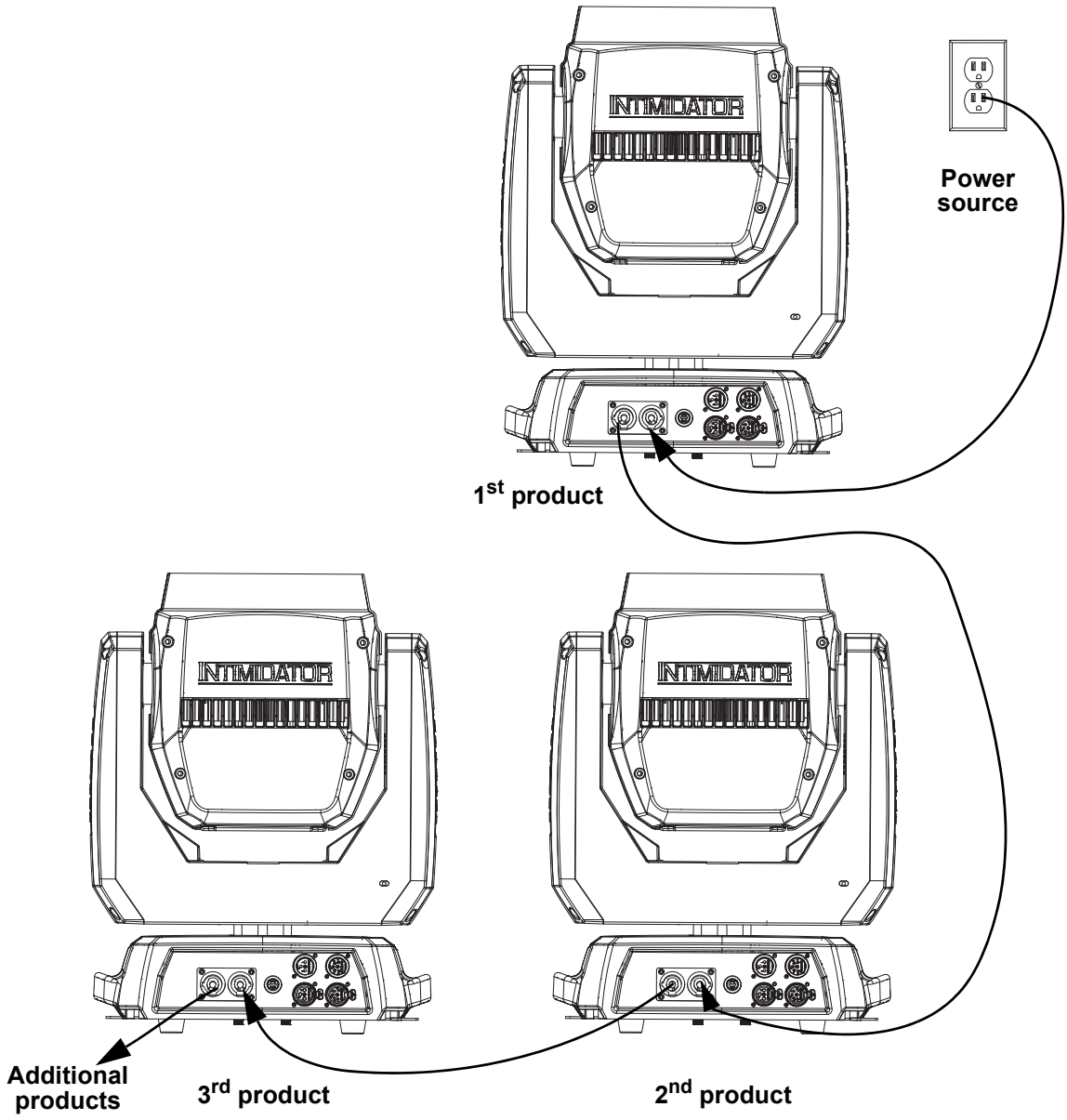

It is possible to link up to 3 Intimidator Trio XD products on 100 VAC, up to 4 products on 120 VAC, up to 8 products on 230 VAC, or up to 9 products on 240 VAC.

The power linking diagram shown above corresponds to the North American version of the product ONLY! If using the product in other markets, consult with the local Chauvet distributor as power linking connectors and requirements may differ by country or region.

Mounting

Before mounting the product, read and follow the safety recommendations indicated in the Safety Notes.

Orientation

The Intimidator Trio XD may be mounted in any position; however, make sure adequate ventilation is provided around the product.

Rigging

- Before deciding on a location for the product, always make sure there is easy access to the product for maintenance and programming.
- Make sure that the structure and attachment points can support the weight before hanging the product (see the Technical Specifications section for weight information).
- When mounting the product overhead, always use a safety cable. Mount the product securely to a rigging point, such as an elevated platform or a truss.
- When rigging the product onto a truss, use a mounting clamp of appropriate weight capacity. The bracket has a 13-mm hole, which is appropriate for this purpose.
- When power linking multiple products, mount the products close enough for power linking cables to reach.
- When mounting the product on the floor, make sure that the product and cables are away from people and vehicles.

Mounting Diagram

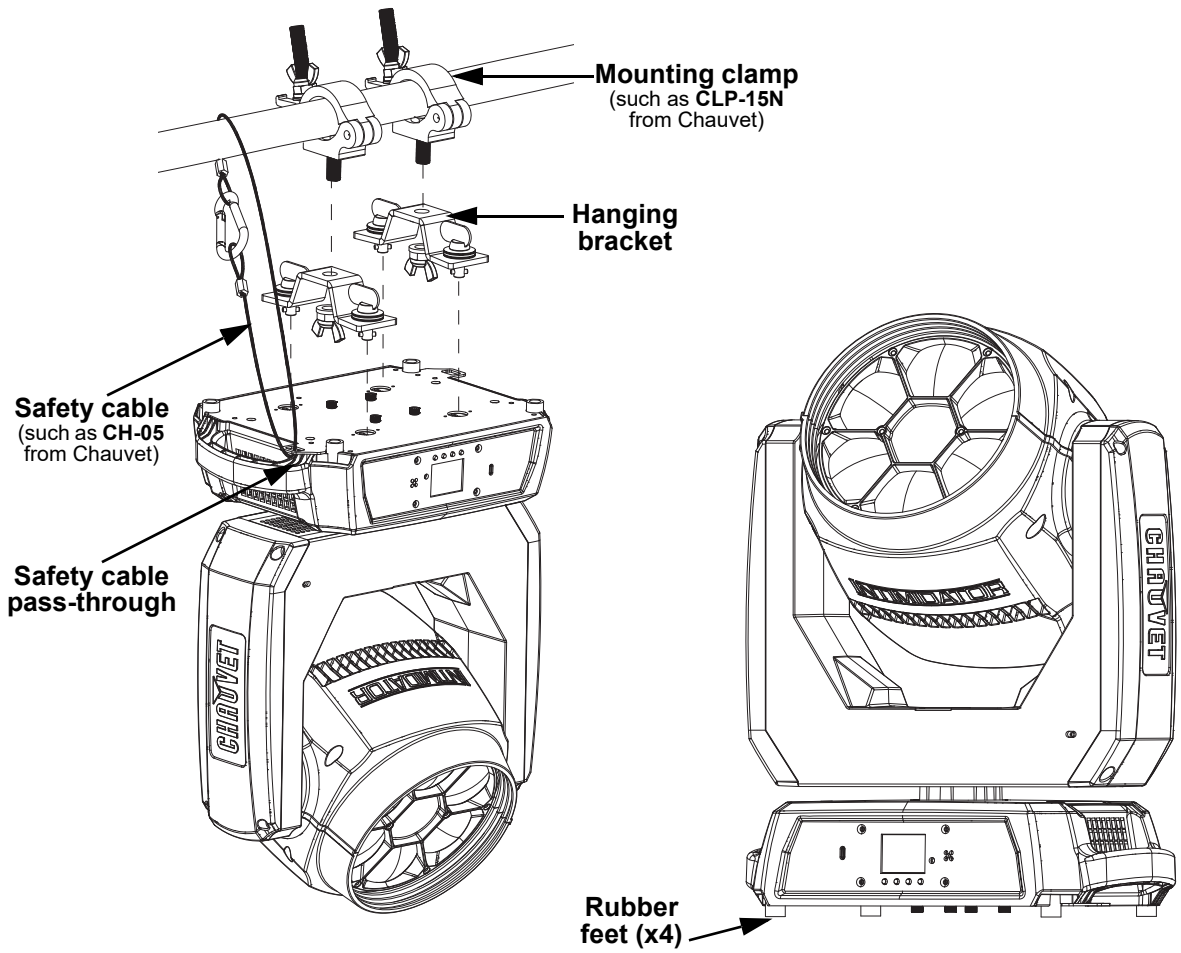

Overhead mounting **Surface mounting**

4. Operation

Control Panel Operation

To access the control panel functions, use the four buttons located underneath the display. Please refer to the Product Overview to see the button locations on the control panel.

Button	Name	Function
	<MENU>	Exits from the current menu or function
	<UP>	Navigates upwards through the menu list and increases the numeric value when in a function
	<DOWN>	Navigates downwards through the menu list and decreases the numeric value when in a function
	<ENTER>	Enables the currently displayed menu or sets the currently selected value into the selected function

Menu Map

Refer to the Intimidator Trio XD product page on www.chauvetdj.com for the latest menu map and software.

Main Level	Programming Levels				Description
Address	**001–512**				Sets the DMX starting address
Run Mode	**DMX**		**16CH**		Selects the DMX mode
			23CH		
			52CH		
	Slave		**Slave1–4**		Selects Slave mode 1, 2, 3, or 4
	Auto				Selects Auto mode
	Sound				Selects Sound-Active mode
	RF		**RFP**		Sets the product to work with public RF signal
			RF 1–4		Sets the product to work with the RFC-XL remote in group 1, 2, 3, or 4 (RF remote must be bound to the product first)
	Manual	**Crossfade (sec)**		**0000–1200**	Sets the speed of playback in seconds
		Hold time (sec)		**0000–1200**	Sets the time between playback in seconds
		Step 1	**Clear**	**NO**	Resets all step 1 manual values to 0
				YES	
			Delete	**NO**	Removes step 1 from playback
				YES	
			Pan	**000–255**	Enables manual control of settings via control panel
			Tilt		
			P/T Speed		
			Red		
			Green		
			Blue		
			White		
			CTC		
			Color		

Main Level	Programming Levels				Description
Run Mode (cont.)	Manual (cont.)	Step 1 (cont.)	Pattern	000–255	Enables manual control of settings via control panel
			LED Macro		
			LED Ma. Speed		
			LED Ma. Fade		
			Background		
			Background dimmer		
			Dimmer		
			Strobe		
			Frost		
			Rotate		
			Zoom		
		Step 2	Clear	NO	Resets all step 1 manual values to 0
				YES	
			Delete	NO	Removes step 1 from playback
				YES	
			Pan	000–255	Enables manual control of settings via control panel
			Tilt		
			P/T Speed		
			Red		
			Green		
			Blue		
			White		
			CTC		
			Color		
			Pattern		
			LED Macro		
			LED Ma. Speed		
			LED Ma. Fade		
			Background		
			Background dimmer		
			Dimmer		
			Strobe		
			Frost		
			Rotate		
			Zoom		
Setup	DFI			RX	Sets the DFI mode
				TX	
				OFF	
	DFI Channel			001–16	Sets the DFI channel
	Pan Reverse			OFF	Normal pan operation
				ON	Reverse pan operation
	Tilt Reverse			OFF	Normal tilt operation
				ON	Reverse tilt operation

Main Level	Programming Levels		Description
Setup (cont.)	Pan Angle	540	Selects the 540° pan angle range
		360	Selects the 360° pan angle range
		180	Selects the 180° pan angle range
	Tilt Angle	270	Selects the 270° tilt angle range
		180	Selects the 180° tilt angle range
		90	Selects the 90° tilt angle range
	Totem Mode	OFF	Does not restrict the pan and tilt motion
		UP	Restricts the pan and tilt motion for overhead mounting
		DOWN	Restricts the pan and tilt motion for surface/floor mounting
	BL.O. P/T Move	OFF	Do not black out while panning/tilting
		ON	Blackout while panning/tilting
	Display	OFF	Display turns off after 30 sec.
		ON	Display stays on
	Screen Rev	OFF	Normal display
		ON	Reverse display
	Dimmer Curve	Linear	Set the dimmer curve
		Square	
		I Squa	
		SCurve	
	Dimmer Speed	Smooth	Smooth dimmer speed
		Fast	Fast dimmer speed
	Sensitivity	001–100	Sets sound sensitivity
	DMX Loss	Hold	Holds the last setting when signal is lost
		Black	Blacks out the product when signal is lost
		Auto	Sets the unit to Auto mode when signal is lost
		Sound	Sets the unit to Sound mode when signal is lost
	Indicator	ON	Enables/disables LED indicator
		OFF	
	Flash if DMX	ON	Enables/disables LED flash if DMX
		OFF	
	RF	BIND	Shows instructions on how to bind the RF remote to the product
	USB Update	Update Me	Selects an update file for this product
		Update Other	Selects an update file for other connected products
	Reset Function	NO	Resets all functions from start up
		YES	
	Factory Set	NO	Do not reset to factory defaults
		YES	Reset to factory default settings

Main Level	Programming Levels		Description
Sys Info	**Ver:**	**V_**	Displays the firmware version
	Running Mode:	**_ _ _ _ _**	Displays the current running mode
	DMX Address:	**_ _ _**	Displays the current DMX address
	Temperature:	**_ _ _**	Displays the current product temperature
	Fixture Time	**_ _ _ _ _**	Shows number of hours product has been powered on
	UID	**_ _ _ _ _ _**	Shows product UID
	LFAN1:	**_ _ _ _**	Displays LED fan information
	Base Fan:	**_ _ _ _**	Displays base fan information
	DFI Fre:	**000/100**	Displays connected DFI information

DMX Configuration

The Intimidator Trio XD works with a DMX controller. Information about DMX is in the Chauvet DMX Primer, which is available from the Chauvet website chauvetlighting.com/downloads/DMX_Primer_rev05_WO.pdf.

Personality and Starting Address

Starting Address

The Intimidator Trio XD uses up to 52 DMX channels, which defines the highest recommended address to **461**.

When selecting a starting DMX address, always consider the number of DMX channels the DMX mode uses. If the starting address is set too high, access to some channels could be restricted.

For information about the DMX protocol, download the DMX Primer from www.chauvetdj.com.

To select the starting address, do the following:

1. Press **<MENU>**.
2. Use **<UP>** or **<DOWN>** to select from **001–512**.
3. Press **<ENTER>**.

DMX Personalities

The Intimidator Trio XD has 3 DMX personalities: 16CH, 23CH, and 52CH.

To select which DMX personality to use, follow the steps below:

1. Press **<MENU>** twice.
2. Use **<UP>** or **<DOWN>** to select **Run Mode**.
3. Press **<ENTER>**.
4. Use **<UP>** or **<DOWN>** to select **DMX**.
5. Press **<ENTER>**.
6. Use **<UP>** or **<DOWN>** to select the DMX personality, from **16CH, 23CH,** or **52CH**.
7. Press **<ENTER>**.

DMX Channel Assignments and Values

Zones for DMX Control

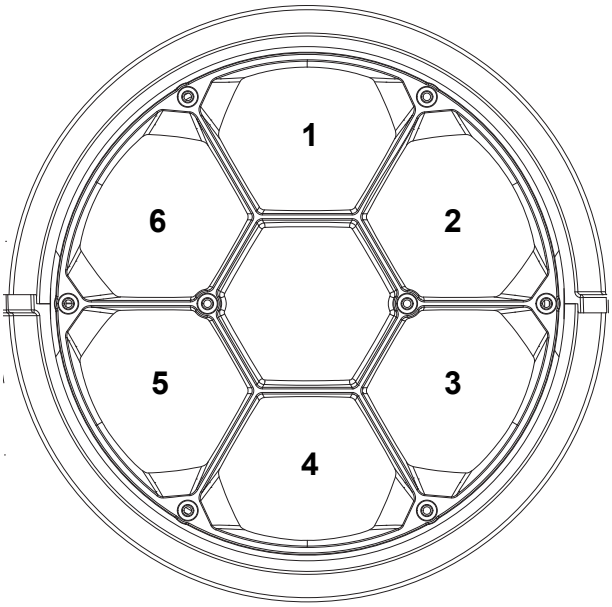

Control Chart

Value	Percent/Setting	Value	Percent/Setting
000 ⇔ 009	Blackout during pan/tilt off	110 ⇔ 134	Reserved for future use
010 ⇔ 014	Blackout during pan/tilt on	135 ⇔ 139	Dimmer fast
015 ⇔ 019	No function	140 ⇔ 144	Dimmer smooth
020 ⇔ 024	RGBW color mixing	145 ⇔ 149	Linear dimmer
025 ⇔ 029	CMY color mixing	150 ⇔ 154	Square dimmer
030 ⇔ 049	No function	155 ⇔ 159	Inverse square dimmer
050 ⇔ 054	Pan reset	160 ⇔ 164	S-curve dimmer
055 ⇔ 059	Tilt reset	165 ⇔ 169	White color mode
060 ⇔ 069	Reserved for future use	170 ⇔ 174	Full mode
070 ⇔ 074	All reset	175 ⇔ 184	Reserved for future use
075 ⇔ 079	Reserved for future use	185 ⇔ 186	PWM frequency 600 Hz
080 ⇔ 084	Pan/tilt reverse	187 ⇔ 188	PWM frequency 1200 Hz
085 ⇔ 089	Pan reverse	189 ⇔ 190	PWM frequency 2000 Hz
090 ⇔ 094	Tilt reverse	191 ⇔ 192	PWM frequency 4000 Hz
095 ⇔ 099	Pan normal	193 ⇔ 194	PWM frequency 6000 Hz
100 ⇔ 104	Tilt normal	195 ⇔ 196	PWM frequency 15000 Hz
105 ⇔ 109	Pan/tilt normal	197 ⇔ 255	Reserved for future use

Strobe Chart

Value	Percent/Setting	Value	Percent/Setting
000 ⇔ 019	Off	**145 ⇔ 149**	On
020 ⇔ 024	On	**150 ⇔ 164**	Fade on 0-100%, fast to slow
025 ⇔ 064	Strobe, fast to slow	**165 ⇔ 169**	On
065 ⇔ 069	On	**170 ⇔ 184**	Pulse strobe, fast to slow
070 ⇔ 084	Snap to fade out, fast to slow	**185 ⇔ 189**	On
085 ⇔ 089	On	**190 ⇔ 204**	Random pulse strobe, fast to slow
090 ⇔ 104	Fade on 0–100%, snap off, fast to slow	**205 ⇔ 209**	On
105 ⇔ 109	On	**210 ⇔ 224**	Strobe 0-100-0%, fast to slow
110 ⇔ 124	Snap, fast to slow	**225 ⇔ 229**	On
125 ⇔ 129	On	**230 ⇔ 244**	Pulse effect 100–0%, fast to slow
130 ⇔ 144	Snap 100-0%, fade out, fast to slow	**245 ⇔ 255**	On

Color Macros

Value	Percent/Setting	Value	Percent/Setting
000	**No function**	**087**	**Green**
001	**On**	**088 ⇔ 124**	**Green to Yellow**
002	**White 2700K**	**125**	**Yellow**
003 ⇔ 004	**White 3200K**	**126 ⇔ 162**	**Yellow to Red**
005 ⇔ 006	**White 4200K**	**163**	**Red**
007 ⇔ 008	**White 5600K**	**164 ⇔ 238**	**Red to Blue**
009 ⇔ 010	**White 8000K**	**239**	**Blue**
011	**Blue**	**240 ⇔ 247**	**Color fade, fast to slow**
012 ⇔ 086	**Blue to Green**	**248 ⇔ 255**	**Color snap, fast to slow**

The color temperatures above are simulated renditions of the color output produced compared with a tungsten lamp at the specified color temperature. Chauvet makes no guarantee of the color output accuracy.

Pattern Values

Values	Pattern	Values	Pattern	Values	Pattern
000 ⇔ 005	No function	**086 ⇔ 090**	Pattern 16	**171 ⇔ 175**	Pattern 33
006 ⇔ 010	Pattern 1	**091 ⇔ 095**	Pattern 17	**176 ⇔ 180**	Pattern 34
011 ⇔ 015	Pattern 2	**096 ⇔ 100**	Pattern 18	**181 ⇔ 185**	Pattern 35
016 ⇔ 020	Pattern 3	**101 ⇔ 105**	Pattern 19	**186 ⇔ 190**	Pattern 36
021 ⇔ 025	Pattern 4	**106 ⇔ 110**	Pattern 20	**191 ⇔ 195**	Pattern 37
026 ⇔ 030	Pattern 5	**111 ⇔ 115**	Pattern 21	**196 ⇔ 200**	Pattern 38
031 ⇔ 035	Pattern 6	**116 ⇔ 120**	Pattern 22	**201 ⇔ 205**	Pattern 39
036 ⇔ 040	No function	**121 ⇔ 125**	Pattern 23	**206 ⇔ 210**	Pattern 40
041 ⇔ 045	Pattern 7	**126 ⇔ 130**	Pattern 24	**211 ⇔ 215**	Pattern 41
046 ⇔ 050	Pattern 8	**131 ⇔ 135**	Pattern 25	**216 ⇔ 220**	Pattern 42
051 ⇔ 055	Pattern 9	**136 ⇔ 140**	Pattern 26	**221 ⇔ 225**	Pattern 43
056 ⇔ 060	Pattern 10	**141 ⇔ 145**	Pattern 27	**226 ⇔ 230**	Pattern 44
061 ⇔ 065	Pattern 11	**146 ⇔ 150**	Pattern 28	**231 ⇔ 235**	Pattern 45
066 ⇔ 070	Pattern 12	**151 ⇔ 155**	Pattern 29	**236 ⇔ 240**	Pattern 46
071 ⇔ 075	Pattern 13	**156 ⇔ 160**	Pattern 30	**241 ⇔ 245**	Pattern 47
076 ⇔ 080	Pattern 14	**161 ⇔ 165**	Pattern 31	**246 ⇔ 255**	On
081 ⇔ 085	Pattern 15	**166 ⇔ 170**	Pattern 32		

LED Macro Chart

Values	Pattern	Values	Pattern	Values	Pattern
000 ⇔ 015	No function	**094 ⇔ 095**	Macro 39	**182 ⇔ 183**	Macro 78
016 ⇔ 017	Macro 1	**096 ⇔ 097**	Macro 40	**184 ⇔ 185**	Macro 79
018 ⇔ 019	Macro 2	**098 ⇔ 099**	Macro 41	**186 ⇔ 187**	Macro 80
020 ⇔ 021	Macro 3	**100 ⇔ 101**	Macro 42	**188 ⇔ 189**	Macro 81
022 ⇔ 023	Macro 4	**102 ⇔ 103**	Macro 43	**190 ⇔ 191**	Macro 82
024 ⇔ 025	Macro 5	**116 ⇔ 117**	Macro 44	**192 ⇔ 193**	Macro 83
026 ⇔ 027	Macro 6	**118 ⇔ 119**	Macro 45	**194 ⇔ 195**	Macro 84
028 ⇔ 029	Macro 7	**120 ⇔ 121**	Macro 46	**196 ⇔ 197**	Macro 85
030 ⇔ 031	Macro 8	**122 ⇔ 123**	Macro 47	**198 ⇔ 199**	Macro 86
032 ⇔ 035	Macro 9	**124 ⇔ 125**	Macro 48	**200 ⇔ 201**	Macro 87
036 ⇔ 037	Macro 10	**126 ⇔ 127**	Macro 49	**202 ⇔ 203**	Macro 88
038 ⇔ 039	Macro 11	**128 ⇔ 129**	Macro 50	**204 ⇔ 205**	Macro 89
040 ⇔ 043	Macro 12	**130 ⇔ 131**	Macro 51	**206 ⇔ 207**	Macro 90
044 ⇔ 045	Macro 13	**132 ⇔ 133**	Macro 52	**208 ⇔ 209**	Macro 91
046 ⇔ 047	Macro 14	**134 ⇔ 135**	Macro 53	**210 ⇔ 211**	Macro 92
048 ⇔ 049	Macro 15	**136 ⇔ 137**	Macro 55	**212 ⇔ 213**	Macro 93
050 ⇔ 051	Macro 16	**138 ⇔ 139**	Macro 56	**214 ⇔ 215**	Macro 94
052 ⇔ 053	Macro 17	**140 ⇔ 141**	Macro 57	**216 ⇔ 217**	Macro 95
054 ⇔ 055	Macro 18	**142 ⇔ 143**	Macro 58	**218 ⇔ 219**	Macro 96
056 ⇔ 057	Macro 19	**144 ⇔ 145**	Macro 59	**220 ⇔ 221**	Macro 97
058 ⇔ 059	Macro 20	**146 ⇔ 147**	Macro 60	**222 ⇔ 223**	Macro 98
060 ⇔ 061	Macro 21	**148 ⇔ 149**	Macro 61	**224 ⇔ 225**	Macro 99
062 ⇔ 063	Macro 23	**150 ⇔ 151**	Macro 62	**226 ⇔ 227**	Macro 100
064 ⇔ 065	Macro 24	**152 ⇔ 153**	Macro 63	**228 ⇔ 229**	Macro 101
066 ⇔ 067	Macro 25	**154 ⇔ 155**	Macro 64	**230 ⇔ 231**	Macro 102
068 ⇔ 069	Macro 26	**156 ⇔ 157**	Macro 65	**232 ⇔ 233**	Macro 103
070 ⇔ 071	Macro 27	**158 ⇔ 159**	Macro 66	**234 ⇔ 235**	Macro 104
072 ⇔ 073	Macro 28	**160 ⇔ 161**	Macro 67	**236 ⇔ 237**	Macro 105
074 ⇔ 075	Macro 29	**162 ⇔ 163**	Macro 68	**238 ⇔ 239**	Macro 106
076 ⇔ 077	Macro 30	**164 ⇔ 165**	Macro 69	**240 ⇔ 241**	Macro 107
078 ⇔ 079	Macro 31	**166 ⇔ 167**	Macro 70	**242 ⇔ 243**	Macro 108
080 ⇔ 081	Macro 32	**168 ⇔ 169**	Macro 71	**244 ⇔ 245**	Macro 109
082 ⇔ 083	Macro 33	**170 ⇔ 171**	Macro 72	**246 ⇔ 247**	Macro 110
084 ⇔ 085	Macro 34	**172 ⇔ 173**	Macro 73	**248 ⇔ 249**	Macro 111
086 ⇔ 087	Macro 35	**174 ⇔ 175**	Macro 74	**250 ⇔ 251**	Macro 112
088 ⇔ 089	Macro 36	**176 ⇔ 177**	Macro 75	**252 ⇔ 253**	Macro 113
090 ⇔ 091	Macro 37	**178 ⇔ 179**	Macro 76	**254 ⇔ 255**	Macro 114
092 ⇔ 093	Macro 38	**180 ⇔ 181**	Macro 77		

RGBW/CMY channels must be active for Macros 1-53.

DMX Charts

23CH	52CH	Function		Value	Percent/Setting
1	1	Pan		000 ⇔ 255	0–100%
2	2	Fine pan		000 ⇔ 255	Fine control (16-bit)
3	3	Tilt		000 ⇔ 255	0–100%
4	4	Fine tilt		000 ⇔ 255	Fine control (16-bit)
5	5	Pan/tilt speed		000 ⇔ 255	0–100%, fast to slow
6	6	Dimmer		000 ⇔ 255	0–100%
–	7	Fine dimmer		000 ⇔ 255	Fine control (16-bit)
7	8	Strobe		000 ⇔ 255	see Strobe Chart
8	9	CTC		000	No function
				001 ⇔ 255	19000K to 2700K
9	10	Colors		000 ⇔ 255	see Color Macros
10	11	Pattern		000 ⇔ 255	see Pattern Values
11	12	LED macro		000 ⇔ 255	see LED Macro Chart
12	13	LED macro speed		000 ⇔ 127	Clockwise, fast to slow
				128	Stop
				129 ⇔ 255	Counterclockwise, slow to fast
13	14	LED macro delay		000 ⇔ 255	0–100%
14	15	Background colors		000 ⇔ 255	see Color Macros
15	16	Background color dimmer		000 ⇔ 255	0–100%
	17	Background red		000 ⇔ 255	0–100%
	18	Background green		000 ⇔ 255	0–100%
	19	Background blue		000 ⇔ 255	0–100%
	20	Background white		000 ⇔ 255	0–100%
16	21	Pattern rotation		000 ⇔ 064	Counterclockwise pattern indexing
				065 ⇔ 085	Pattern bounce 1, slow to fast
				086 ⇔ 106	Pattern bounce 2, slow to fast
				107 ⇔ 127	Pattern bounce 3, slow to fast
				128 ⇔ 191	Pattern rotate, fast to slow
				192 ⇔ 255	Reverse pattern rotate, fast to slow
17	22	Frost		000 ⇔ 255	100–0%
18	23	Zoom		000 ⇔ 255	Narrow to wide
19	24	Control		000 ⇔ 255	see Control Chart
20	25	Red	Cyan	000 ⇔ 255	0–100% / 100–0%
21	26	Green	Magenta	000 ⇔ 255	0–100% / 100–0%
22	27	Blue	Yellow	000 ⇔ 255	0–100% / 100–0%
23	28	White		000 ⇔ 255	0–100%
	29	Red 1	Cyan 1	000 ⇔ 255	0–100% / 100–0%
	30	Green 1	Magenta 1	000 ⇔ 255	0–100% / 100–0%
	31	Blue 1	Yellow 1	000 ⇔ 255	0–100% / 100–0%
	32	White 1		000 ⇔ 255	0–100%
	33	Red 2	Cyan 2	000 ⇔ 255	0–100% / 100–0%
	34	Green 2	Magenta 2	000 ⇔ 255	0–100% / 100–0%
	35	Blue 2	Yellow 2	000 ⇔ 255	0–100% / 100–0%
	36	White 2		000 ⇔ 255	0–100%
	37	Red 3	Cyan 3	000 ⇔ 255	0–100% / 100–0%
	38	Green 3	Magenta 3	000 ⇔ 255	0–100% / 100–0%

23CH	52CH	Function		Value	Percent/Setting
	39	Blue 3	Yellow 3	000 ⇔ 255	0–100% / 100–0%
	40	White 3		000 ⇔ 255	0–100%
	41	Red 4	Cyan 4	000 ⇔ 255	0–100% / 100–0%
	42	Green 4	Magenta 4	000 ⇔ 255	0–100% / 100–0%
	43	Blue 4	Yellow 4	000 ⇔ 255	0–100% / 100–0%
	44	White 4		000 ⇔ 255	0–100%
	45	Red 5	Cyan 5	000 ⇔ 255	0–100% / 100–0%
	46	Green 5	Magenta 5	000 ⇔ 255	0–100% / 100–0%
	47	Blue 5	Yellow 5	000 ⇔ 255	0–100% / 100–0%
	48	White 5		000 ⇔ 255	0–100%
	49	Red 6	Cyan 6	000 ⇔ 255	0–100% / 100–0%
	50	Green 6	Magenta 6	000 ⇔ 255	0–100% / 100–0%
	51	Blue 6	Yellow 6	000 ⇔ 255	0–100% / 100–0%
	52	White 6		000 ⇔ 255	0–100%

16CH	Function	Value	Percent/Setting
1	Pan	000 ⇔ 255	0–100%
2	Tilt	000 ⇔ 255	0–100%
3	Built-in speed	000 ⇔ 255	0–100%, fast to slow
4	Red	000 ⇔ 255	0–100%
5	Green	000 ⇔ 255	0–100%
6	Blue	000 ⇔ 255	0–100%
7	White	000 ⇔ 255	0–100%
8	LED macro*	000 ⇔ 255	see LED Macro Chart
9	LED macro speed	000 ⇔ 127	Fast to slow
		128	Stop
		129 ⇔ 255	Slow to fast
10	Dimmer	000 ⇔ 255	0–100%
11	Strobe	000 ⇔ 255	see Strobe Chart
12	Zoom	000 ⇔ 255	Wide to narrow
13	Control	000 ⇔ 255	see Control Chart

16CH	Function	Value	Percent/Setting
14	Pan/Tilt built-in	**000 ⇔ 007**	No function
		008 ⇔ 023	Pan/tilt macro 1
		024 ⇔ 039	Pan/tilt macro 2
		040 ⇔ 055	Pan/tilt macro 3
		056 ⇔ 071	Pan/tilt macro 4
		072 ⇔ 087	Pan/tilt macro 5
		088 ⇔ 103	Pan/tilt macro 6
		104 ⇔ 119	Pan/tilt macro 7
		120 ⇔ 135	Pan/tilt macro 8
		136 ⇔ 151	Sound pan/tilt macro 1
		152 ⇔ 167	Sound pan/tilt macro 2
		168 ⇔ 183	Sound pan/tilt macro 3
		184 ⇔ 199	Sound pan/tilt macro 4
		200 ⇔ 215	Sound pan/tilt macro 5
		216 ⇔ 231	Sound pan/tilt macro 6
		232 ⇔ 247	Sound pan/tilt macro 7
		248 ⇔ 255	Sound pan/tilt macro 8
15	Pattern rotation	**000 ⇔ 064**	Counterclockwise pattern indexing
		065 ⇔ 085	Pattern bounce 1, slow to fast
		086 ⇔ 106	Pattern bounce 2, slow to fast
		107 ⇔ 127	Pattern bounce 3, slow to fast
		128 ⇔ 191	Pattern rotate, fast to slow
		192 ⇔ 255	Reverse pattern rotate, fast to slow
16	Frost	**000 ⇔ 255**	100–0%

Standalone Configuration

Set the product in one of the standalone modes to operate without a DMX controller.

Never connect a product that is operating in any standalone mode to a DMX string connected to a DMX controller. Products in standalone mode may transmit DMX signals that could interfere with the DMX signals from the controller.

Automatic Program

To run the Intimidator Trio XD in automatic mode:

1. Press **<MENU>** and use **<UP>** or **<DOWN>** until **Run Mode** is highlighted on the display.
2. Press **<ENTER>**.
3. Use **<UP>** or **<DOWN>** to select the **Auto**.

Sound-Active Mode

To run the Intimidator Trio XD in sound-active mode:

1. Press **<MENU>** and use **<UP>** or **<DOWN>** until **Run Mode** is highlighted on the display.
2. Press **<ENTER>**.
3. Use **<UP>** or **<DOWN>** to select the **Sound**.
4. Press **<ENTER>**.

The product will only respond to low frequencies of music (bass and drums).

Manual Mode

To run the Intimidator Trio XD on Manual mode:

1. Press **<MENU>**.
2. Use **<UP>** or **<DOWN>** to select **Run Mode**.
3. Press **<ENTER>**.
4. Use **<UP>** or **<DOWN>** to select **Manual**.
5. Press **<ENTER>**.
6. Use **<UP>** or **<DOWN>** to select **Crossfade (sec)** (sets the speed of scene playback in seconds), **Hold time (sec)** (Sets the time between scene playback in seconds)**, Step 1** (first step that will play back)**,** or **Step 2** (second step that will playback).

To program **Step 1** or **Step 2**:

1. Use **<UP>** or **<DOWN>** to select **Step 1** or **Step 2**
2. Press **<ENTER>**.
3. Use **<UP>** or **<DOWN>** to select from **Pan**, **Tilt**, **P/T Speed**, **Red**, **Green**, **Blue**, **White**, **CTC, Color, Pattern, LED Macro, LED Ma. Speed, LED Ma. Fade, Background, Background dimmer, Dimmer, Strobe, Frost, Rotate,** or **Zoom**.
4. Press **<ENTER>**.
5. Use **<UP>** or **<DOWN>** to increase or decrease the value of the selected function, from **000–255**.
6. Press **<ENTER>**.
7. Repeat steps 3–6 until the product is set as desired.

To clear or delete **Step 1** or **Step 2**:

1. Use **<UP>** or **<DOWN>** to select from **Clear** or **Delete**.
2. Press **<ENTER>**.
3. Use **<UP>** or **<DOWN>** to select from **Yes** or **No**.
4. Press **<ENTER>**.

- **Selecting Clear will reset all manual options to <000>.**
- **Selecting Delete will reset all manual options to <000> and prevent the step from playback.**

Settings Configuration

D-Fi Setting

To activate or deactivate the D-Fi mode on the Intimidator Trio XD:

1. Press **<MENU>** and use **<UP>** or **<DOWN>** until **Setup** is highlighted on the display.
2. Press **<ENTER>**.
3. Press **<ENTER>** to select **DFI.**
4. Use **<UP>** or **<DOWN>** to select from **RX, TX,** or **OFF.**
5. Press **<ENTER>**.

To set the D-Fi channel on the Intimidator Trio XD:

1. Press **<MENU>** and use **<UP>** or **<DOWN>** until **Setup** is highlighted on the display.
2. Use **<UP>** or **<DOWN>** to select **DFI Channel**.
3. Press **<ENTER>**.
4. Use **<UP>** or **<DOWN>** to set the D-Fi channel from **1–16**.
5. Press **<ENTER>**.

Pan Reverse

To set the pan orientation on the Intimidator Trio XD:

1. Press **<MENU>**.
2. Use **<UP>** or **<DOWN>** to select **Setup**.
3. Press **<ENTER>**.
4. Use **<UP>** or **<DOWN>** to select **Pan Reverse**.
5. Press **<ENTER>**.
6. Use **<UP>** or **<DOWN>** to select **OFF** (normal pan orientation) or **ON** (reverse pan orientation).
7. Press **<ENTER>**.

Tilt Reverse

To set the tilt orientation on the Intimidator Trio XD:

1. Press **<MENU>**.
2. Use **<UP>** or **<DOWN>** to select **Setup**.
3. Press **<ENTER>**.
4. Use **<UP>** or **<DOWN>** to select **Tilt Reverse**.
5. Press **<ENTER>**.
6. Use **<UP>** or **<DOWN>** to select **OFF** (normal tilt orientation) or **ON** (reverse tilt orientation).
7. Press **<ENTER>**.

Pan Angle

To set the pan angle range on the Intimidator Trio XD:

1. Press **<MENU>**.
2. Use **<UP>** or **<DOWN>** to select **Setup**.
3. Press **<ENTER>**.
4. Use **<UP>** or **<DOWN>** to select **Pan Angle**.
5. Press **<ENTER>**.
6. Use **<UP>** or **<DOWN>** to select from **540** (540°), **360** (360°), or **180** (180°).
7. Press **<ENTER>**.

Tilt Angle

To set the tilt angle range on the Intimidator Trio XD:

1. Press **<MENU>**.
2. Use **<UP>** or **<DOWN>** to select **Setup**.
3. Press **<ENTER>**.
4. Use **<UP>** or **<DOWN>** to select **Tilt Angle**.
5. Press **<ENTER>**.
6. Use **<UP>** or **<DOWN>** to select from **270** (270°), **180** (180°), or **90** (90°).
7. Press **<ENTER>**.

Totem Mode

To activate the Totem mode:

1. Press **<MENU>**.
2. Use **<UP>** or **<DOWN>** to select **Setup**.
3. Press **<ENTER>**.
4. Use **<UP>** or **<DOWN>** to select **Totem Mode**.
5. Press **<ENTER>**.
6. Use **<UP>** or **<DOWN>** to select **OFF** (normal range of motion), **UP** (restricts the pan and tilt motion for overhead mounting), or **DOWN** (restricts the pan and tilt motion for surface/floor mounting).
7. Press **<ENTER>**.

Blackout on Movement

To set how the Intimitdator Trio XD will move when blackout is active:

1. Press **<MENU>**.
2. Use **<UP>** or **<DOWN>** to select **Setup**.
3. Press **<ENTER>**.
4. Use **<UP>** or **<DOWN>** to select **BL.O.P/T Move.**
5. Press **<ENTER>**.
6. Use **<UP>** or **<DOWN>** to select **OFF** (does not blackout on panning/tilting movement) or **ON** (blackout on pan/tilt movement).
7. Press **<ENTER>**.

Display Timer

To set how long the display screen stays active:

1. Press **<MENU>**.
2. Use **<UP>** or **<DOWN>** to select **Setup**.
3. Press **<ENTER>**.
4. Use **<UP>** or **<DOWN>** to select **Display**.
5. Press **<ENTER>**.
6. Use **<UP>** or **<DOWN>** to select **OFF** (display turns off after 30 seconds) or **ON** (display stays on).
7. Press **<ENTER>**.

Screen Reverse

To set the display orientation on the Intimidator Trio XD, follow the instructions below:

1. Press **<MENU>**.
2. Use **<UP>** or **<DOWN>** to select **Setup**.
3. Press **<ENTER>**.
4. Use **<UP>** or **<DOWN>** to select **Screen Reverse**.
5. Press **<ENTER>**.
6. Use **<UP>** or **<DOWN>** to select **OFF** (normal display orientation) or **ON** (reverse display orientation).
7. Press **<ENTER>**.

Dimmer Curve

To set the dimmer curve:

1. Press **<MENU>**.
2. Use **<UP>** or **<DOWN>** to select **Setup**.
3. Press **<ENTER>**.
4. Use **<UP>** or **<DOWN>** to select **Dimmer Curve**.
5. Press **<ENTER>**.
6. Use **<UP>** or **<DOWN>** to select from **Linear, Square, I.Squa,** or **SCurve.**
7. Press **<ENTER>**.

Dimmer Speed

To set the dimmer speed:

1. Press **<MENU>**.
2. Use **<UP>** or **<DOWN>** to select **Setup**.
3. Press **<ENTER>**.
4. Use **<UP>** or **<DOWN>** to select **Dimmer Speed**.
5. Press **<ENTER>**.
6. Use **<UP>** or **<DOWN>** to select **Smooth** or **Fast.**
7. Press **<ENTER>**.

Sensitivity

To set the action the Intimidator Trio XD will do when signal is lost:

1. Press **<MENU>**.
2. Use **<UP>** or **<DOWN>** to select **Setup**.
3. Press **<ENTER>**.
4. Use **<UP>** or **<DOWN>** to select **Sensitivity**.
5. Press **<ENTER>**.
6. Use **<UP>** or **<DOWN>** to select from **1–100**.
7. Press **<ENTER>**.

DMX Loss

To set the action the Intimidator Trio XD will do when signal is lost:

1. Press **<MENU>**.
2. Use **<UP>** or **<DOWN>** to select **Setup**.
3. Press **<ENTER>**.
4. Use **<UP>** or **<DOWN>** to select **DMX Loss**.
5. Press **<ENTER>**.
6. Use **<UP>** or **<DOWN>** to select **Hold** (holds the last setting), **Black** (black out the product), **Auto** (sets the unit to auto mode), or **Sound** (sets the unit to sound mode).
7. Press **<ENTER>**.

Indicator

To enable or disable the LED indicator:

1. Press **<MENU>**.
2. Use **<UP>** or **<DOWN>** to select **Setup**.
3. Press **<ENTER>**.
4. Use **<UP>** or **<DOWN>** to select **Indicator**.
5. Press **<ENTER>**.
6. Use **<UP>** or **<DOWN>** to select **OFF** (disabled) or **ON** (enabled).
7. Press **<ENTER>**.

Flash if DMX

To set whether the LED indicator flashes when the fixture is connected to DMX:

1. Press **<MENU>**.
2. Use **<UP>** or **<DOWN>** to select **Setup**.
3. Press **<ENTER>**.
4. Use **<UP>** or **<DOWN>** to select **Flash if DMX**.
5. Press **<ENTER>**.
6. Use **<UP>** or **<DOWN>** to select **ON** (LED indicator flashes when fixture is connected to the DMX) or **OFF** (LED indicator does not flash when fixture is connected to the DMX).
7. Press **<ENTER>**.

Firmware Update

To update the product firmware to the latest factory version:

1. Press **<MENU>** repeatedly until **Setup** is displayed.
2. Press **<ENTER>**.
3. Use **<UP>** or **<DOWN>** to select **USB Update**.
4. Press **<ENTER>**.
5. Use **<UP>** or **<DOWN>** to select **Update Me** (enables update for this fixture) or **Update Other** (enables update for other connected fixtures).

Reset

To reset the Intimidator Trio XD:

1. Press **<MENU>**.
2. Use **<UP>** or **<DOWN>** to select **Setup**.
3. Press **<ENTER>**.
4. Use **<UP>** or **<DOWN>** to select **Reset Function**.
5. Press **<ENTER>**.
6. Use **<UP>** or **<DOWN>** to select **NO** (disables product reset from startup) or **YES** (enables reset of all functions from startup).

Factory Reset

To reset the product to factory default settings:

1. Press **<MENU>** repeatedly until **Setup** is displayed.
2. Press **<ENTER>**.
3. Use **<UP>** or **<DOWN>** to select **Factory Reset**.
4. Press **<ENTER>**.
5. Use **<UP>** or **<DOWN>** to select **YES** (enables factory reset) or **NO** (disables factory reset).

System Information

To view the system information on the Intimidator Trio XD:

1. Press **<MENU>**.
2. Use **<UP>** or **<DOWN>** to select **Sys Info**.
3. Press **<ENTER>.**
4. The system information includes **Ver** (displays the firmware version), **Running Mode** (displays the current running mode), **DMX Address** (displays the current DMX address), **Temperature** (displays the product temperature in °C), **Fixture Time** (numbers of hours the product has been on), **UID** (shows the product's UID), **LFAN1** (shows the LED fan speed), **Base Fan** (shows the base fan speed), and **DFI Fre** (displays the current DFI status).

Master/Slave Mode

The Master/Slave mode allows a single Intimidator Trio XD product (the “master”) to control the actions of one or more Intimidator Trio XD products (the “slaves”) without the need of a DMX controller. The master product will be set to operate in standalone mode, while the slave products will be set to operate in slave mode. Once set and connected, the slave products will operate in unison with the master product.

Configure the products as indicated below.

Slave products:

1. Press **<MENU>**.
2. Use **<UP>** or **<DOWN>** to select **Run Mode**.
3. Press **<ENTER>**.
4. Use **<UP>** or **<DOWN>** to select **Slave**.
5. Press **<ENTER>**.
6. Use **<UP>** or **<DOWN>** to select from **Slave1**, **Slave2**, **Slave3**, or **Slave4**.
   - Select **Slave1** for 100% synchronized actions.
   - Select **Slave2**, **Slave3**, and/or **Slave4** for delayed actions, creating a wave effect.
7. Press **<ENTER>**.
8. Connect the DMX input of the first slave product to the DMX output of the master product.
9. Connect the DMX input of the subsequent slave products to the DMX output of the previous slave product.
10. Finish setting and connecting all the slave products.

Master product:

1. Set the master product to operate in standalone mode.
2. Make the master product the first product in the DMX daisy chain.

- **Configure all the slave products before connecting the master to the daisy chain.**
- **Never connect a DMX controller to a DMX string configured for Master/Slave operation because the controller may interfere with the signals from the master.**
- **Do not connect more than 31 slaves to the master.**

D-Fi Master/Slave Mode

The D-Fi Master/Slave mode allows a single Intimidator Trio XD product (the “master”) to control the actions of one or more Intimidator Trio XD products (the “slaves”) without the need of a DMX controller. The master product will be set to operate in Standalone, whereas the slave products will be set to operate in Slave mode. Once set and connected, the slave products will operate in unison with the master product. Configure the products as indicated below.

Slave products:

1. Press **<MENU>** repeatedly until **Setup** shows on the display.
2. Press **<ENTER>**.
3. Use **<UP>** or **<DOWN>** to select **DFI**.
4. Press **<ENTER>**.
5. Use **<UP>** or **<DOWN>** to select **RX**, then press **<ENTER>**.
6. Use **<UP>** or **<DOWN>** to select the receiving **DFI Channel** from **1–16**.
7. Press **<ENTER>**.
8. Press **<MENU>** repeatedly until **Run Mode** shows on the display. Press **<ENTER>**.
9. Use **<UP>** or **<DOWN>** to select **Slave**. Press **<ENTER>**.
10. Use **<UP>** or **<DOWN>** to select the slave unit(s) from **Slave1–4**. Press **<ENTER>**.
11. Press **<ENTER>**.
12. Finish setting and connecting all the slave products.

Master product:

1. Press **<MENU>** repeatedly until **Setup** shows on the display.
2. Press **<ENTER>**.
3. Use **<UP>** or **<DOWN>** to select **DFI**.
4. Press **<ENTER>**.
5. Use **<UP>** or **<DOWN>** to select **TX**, then press **<ENTER>**.
6. Use **<UP>** or **<DOWN>** to select the transmitting **DFI Channel** to be the same as on the receiving products from **1–16.**
7. Press **<ENTER>**.

- **All products must be set to the same D-Fi channel.**
- **Configure all the slave products before configuring the master to transmit.**
- **Never connect a DMX controller to a D-Fi channel configured for Master/Slave operation because the controller may interfere with the signals from the master.**

RFC Remote Control

The Intimidator Trio XD can be operated with an RFC remote or an RFC-XL remote (sold separately).

For more information about using an RFC or RFC-XL remote, download the user manuals from www.chauvetdj.com

RFC Remote Binding

To enable RF control, the product must bind to the RFC. To bind the Intimidator Trio XD to an RFC, follow the instructions below:

1. Press **<MENU>**. Use **<UP>** or **<DOWN>** to select **SETUP**.
2. Press **<ENTER>**.
3. Use **<UP>** or **<DOWN>** to select **RF**.
4. Press **<ENTER>**.
5. Use **<ENTER>** to select **BIND.**
6. Press and hold **<BLACK OUT>** on the RFC/RFC-XL until **Pairing complete** appears on the display.

RFC Control Options

The RFC-XL can control multiple products at once, whether in defined groups or in public mode. To set the Intimidator Trio XD to public RFC/RFC-XL control or to an RFC-XL group:

1. Press **<MENU>** repeatedly until **Run Mode** shows on the display.
2. Press **<ENTER>**.
3. Use **<UP>** or **<DOWN>** to select **RF**.
4. Press **<ENTER>**.
5. Use **<UP>** or **<DOWN>** to select to control mode, from **RF 1–4** (group 1–4) or **RFP** (public mode).
6. Press **<ENTER>**.

RFC Remote Control Operation

RFC	Button	Function
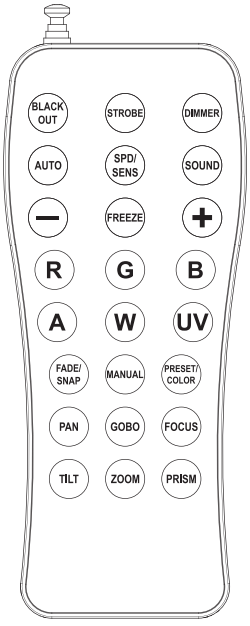	**<BLACK OUT>**	Press to turn off all lights until the button is pressed again
	<STROBE>	Press to toggle strobe, then use **<+>** or **<->** to increase or decrease strobe speed
	<DIMMER>	Press then use **<+>** or **<->** to increase or decrease the dimmer
	<AUTO>	Press to activate automatic mode, then use **<+>** or **<->** to select a program
	<SPD/SENS>	Press then use **<+>** or **<->** to increase or decrease speed or sensitivity
	<SOUND>	Press to activate sound-active mode, then use **<+>** or **<->** to select a program
	<–>	Press to decrease speed, sensitivity, or the dimmer/color value, or to scroll down the list of programs
	<+>	Press to increase speed, sensitivity, or the dimmer/color value, or to scroll up the list of programs
	<FREEZE>	Press to stop all movement and color chasing
	<R>	In manual mode, press then use **<+>** or **<->** to increase or decrease the red value
	<G>	In manual mode, press then use **<+>** or **<->** to increase or decrease the green value
	<B>	In manual mode, press then use **<+>** or **<->** to increase or decrease the blue value
	<A>	Press repeatedly to toggle amber on or off
	<W>	In manual mode, press then use **<+>** or **<->** to increase or decrease the UV value
	<UV>	Press repeatedly to toggle UV on or off
	<FADE/SNAP>	Press to toggle between fade and snap programs
	<MANUAL>	Press to activate manual mode
	<PRESET/ COLOR>	Press to activate presets/colors, then use **<+>** or **<->** to select a preset/color
	<PAN>	In manual mode, press then use **<+>** or **<->** to increase or decrease the pan value
	<GOBO>	In manual mode, press then use **<+>** or **<->** to select a pattern
	<FOCUS>	In manual mode, press then use **<+>** or **<->** to increase or decrease the rotation value
	<TILT>	In manual mode, press then use **<+>** or **<->** to increase or decrease the tilt value
	<ZOOM>	In manual mode, press then use **<+>** or **<->** to increase or decrease the zoom value
	<PRISM>	Press then use **<^>** or **<v>** to increase or decrease the frost value

The RFC remote will not respond to any inputs when Freeze or Black Out is activated. If the remote does not respond when a button is pressed, try pressing <FREEZE> or <BLACK OUT>. Freeze or Black Out may have been inadvertently activated.

RFC-XL Remote Control Operation

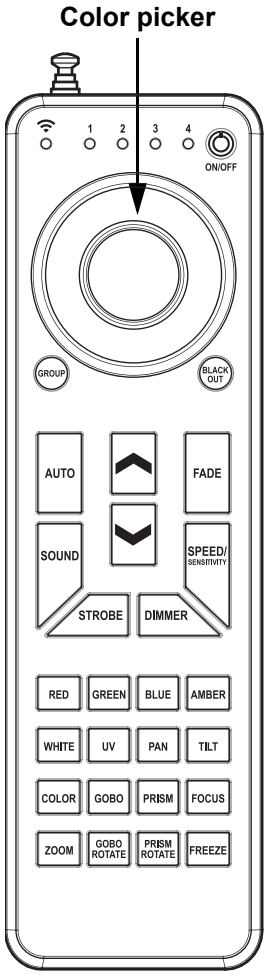

RFC	Button	Function
	<ON/OFF>	Press to power the RFC-XL on or off
	Color picker	Use to select a color (does not correspond to colors printed on remote)
	<BLACK OUT>	Press to turn off all lights until the button is pressed again
	<AUTO>	Press to activate automatic mode, then use **<^>** or **<v>** to select a program
	<FADE>	Press to toggle between fade and snap programs
	<SOUND>	Press to activate sound-active mode, then use **<^>** or **<v>** to select a program
	<SPEED/ SENSITIVITY>	Press then use **<^>** or **<v>** to increase or decrease speed or sensitivity
	<^>	Press to increase the selected value, or to scroll up the list of options
	<v>	Press to decrease the selected value, or to scroll down the list of options
	<STROBE>	Press to toggle strobe, then use **<^>** or **<v>** to increase or decrease strobe speed
	<DIMMER>	Press then use **<^>** or **<v>** to increase or decrease the dimmer
	<RED>	In manual mode, press then use **<^>** or **<v>** to increase or decrease the red value
	<GREEN>	In manual mode, press then use **<^>** or **<v>** to increase or decrease the green value
	<BLUE>	In manual mode, press then use **<^>** or **<v>** to increase or decrease the blue value
	<AMBER>	Press repeatedly to toggle amber on or off
	<WHITE>	In manual mode, press then use **<^>** or **<v>** to increase or decrease the white value
	<UV>	Press repeatedly to toggle UV on or off
	<PAN>	Press then use **<^>** or **<v>** to increase or decrease the pan value
	<TILT>	Press then use **<^>** or **<v>** to increase or decrease the tilt value
	<COLOR>	Press to activate colors, then use **<^>** or **<v>** or the color picker to select a color
	<GOBO>	In manual mode, press then use **<+>** or **<->** to select a pattern
	<FOCUS>	Press then use **<^>** or **<v>** to increase or decrease the frost value
	<ZOOM>	Press then use **<^>** or **<v>** to increase or decrease the zoom value
	<GOBO ROTATE>	Press then use **<^>** or **<v>** to select a preset macro
	<FREEZE>	Press to stop all movement and color chasing

The RFC-XL remote will not respond to any inputs when Black Out is activated. If the remote does not respond when a button is pressed, try pressing <BLACK OUT>. You may have inadvertently activated Black Out.

5. Maintenance

Product Maintenance

Dust build-up reduces light output performance and can cause overheating. This can lead to reduction of the light source's life and/or mechanical wear. To maintain optimum performance and minimize wear, clean all lighting products at least twice a month. However, be aware that usage and environmental conditions could be contributing factors to increase the cleaning frequency.

To clean the product, follow the instructions below:

1. Unplug the product from power.
2. Wait until the product is at room temperature.
3. Use a vacuum (or dry compressed air) and a soft brush to remove dust collected on the external surface/vents.
4. Clean all transparent surfaces with a mild soap solution, ammonia-free glass cleaner, or isopropyl alcohol.
5. Apply the solution directly to a soft, lint free cotton cloth or a lens cleaning tissue.
6. Softly drag any dirt or grime to the outside of the transparent surface.
7. Gently polish the transparent surfaces until they are free of haze and lint.

Always dry the transparent surfaces carefully after cleaning them.

Do not spin the cooling fans using compressed air because they could be damaged.

6. Technical Specifications

Dimensions and Weight

Length	Width	Height	Weight
12.5 in (318 mm)	8.6 in (220 mm)	17.2 in (436 mm)	20.4 lb (9.3 kg)

Note: Dimensions in inches are rounded.

Power

Power Supply Type	Range	Voltage Selection
Switching (internal)	100 to 240 VAC, 50/60 Hz	Auto-ranging

Parameter	100 V, 60 Hz	120V, 60 Hz	230 V, 50 Hz	240 V, 50 Hz
Consumption	333 W	348 W	343 W	317 W
Operating Current	3.3 A	2.9 A	1.5 A	1.3 A
Power linking current (products)	12.5 A (3 products)	12.5 A (4 products)	12.5 A (8 products)	12.5 A (9 products)
Fuse	F 5 A, 250 V	F 5 A, 250 V	F 5 A, 250 V	F 5 A, 250 V

Power I/O	U.S./Worldwide	UK/Europe
Power input connector	powerCon compatible	powerCon compatible
Power output connector	powerCon compatible	powerCon compatible
Power cable plug	Edison (U.S.)	Local Plug

Light Source

Type	Color	Quantity	Power	Current	Lifespan
LED	quad-color RGBW	6	270 W	9.5 A	50,000 hours

Photometrics

Strobe Rate	Zoom Angle
0 to 20 Hz	3° to 22°

Illuminance @ 2m (3°)	Illuminance @ 2m (22°)	Illuminance @ 5m (3°)	Illuminance @ 5m (22°)
124,299 lux	7,505 lux	19,574 lux	1,081 lux

Thermal

Maximum External Temperature	Cooling System
104 °F (40 °C)	Fan-assisted Convection

DMX

I/O Connector	Channel Range
3 and 5-pin XLR	16, 23, or 52

Ordering

Product Name	Item Code	UPC Number
Intimidator Trio XD	08012680	781462230289

UL 1573
CSA C22.2 No. 166
E113093

Contact Us

General Information	Technical Support
Chauvet World Headquarters	
Address: 3360 Davie Rd., Suite 509 Davie, FL 33314 Voice: (954) 577-4455 Fax: (954) 929-5560 Toll Free: (800) 762-1084	Voice: (844) 393-7575 Fax: (954) 756-8015 Email: chauvetcs@chauvetlighting.com Website: www.chauvetdj.com
Chauvet U.K.	
Address: Pod 1 EVO Park Little Oak Drive, Sherwood Park Nottinghamshire, NG15 0EB UK Voice: +44 (0) 1773 511115 Fax: +44 (0) 1773 511110	Email: UKtech@chauvetlighting.eu Website: www.chauvetdj.eu
Chauvet Benelux	
Address: Vaartlaan 9 9800 Deinze Belgium Voice: +32 9 388 93 97	Email: BNLtech@chauvetlighting.eu Website: www.chauvetdj.eu
Chauvet France	
Address: 3, Rue Ampère 91380 Chilly-Mazarin France Voice: +33 1 78 85 33 59	Email: FRtech@chauvetlighting.fr Website: www.chauvetdj.eu
Chauvet Germany	
Address: Bruno-Bürgel-Str. 11 28759 Bremen Germany Voice: +49 421 62 60 20	Email: DEtech@chauvetlighting.de Website: www.chauvetdj.eu
Chauvet Mexico	
Address: Av. de las Partidas 34 - 3B (Entrance by Calle 2) Zona Industrial Lerma Lerma, Edo. de México, CP 52000 Voice: +52 (728) 690-2010	Email: servicio@chauvet.com.mx Website: www.chauvetdj.mx

Warranty & Returns

For warranty terms and conditions and return information, please visit our website.
For customers in the United States and Mexico: www.chauvetlighting.com/warranty-registration.
For customers in the United Kingdom, Republic of Ireland, Belgium, the Netherlands, Luxembourg, France, and Germany: www.chauvetlighting.eu/warranty-registration.